RIGID LIFELINES®
Promise to Perform Industries, Inc.

CEILING-MOUNTED MONORAIL

ANCHOR TRACK™ SYSTEM

Assembly and Operation Instruction Manual

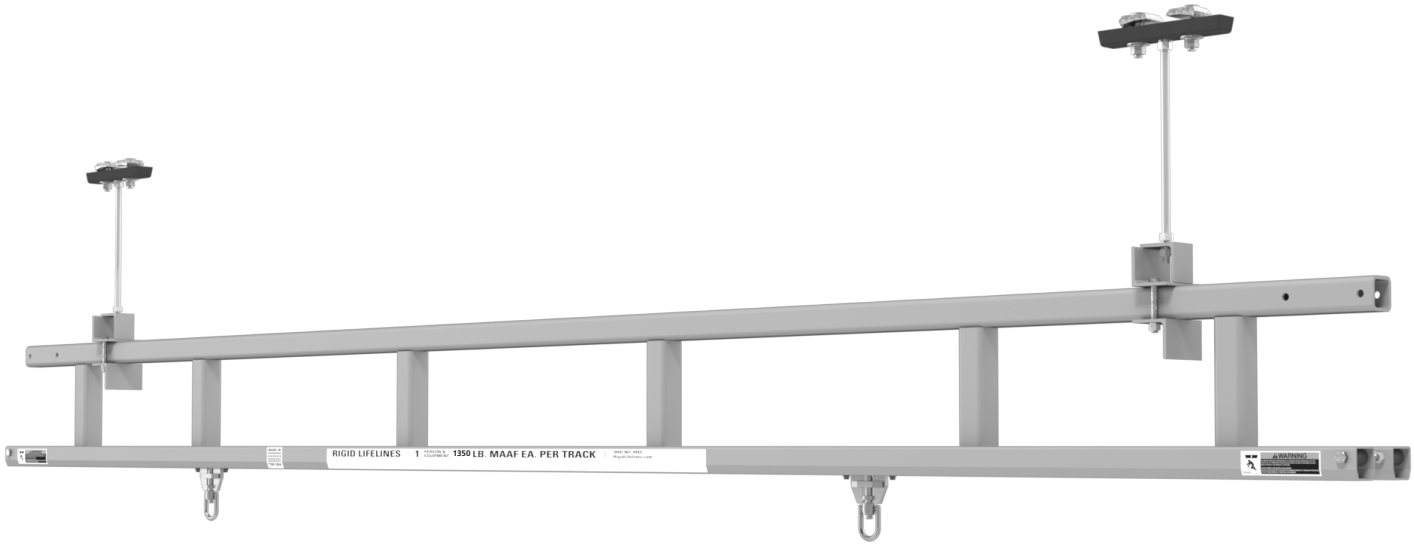

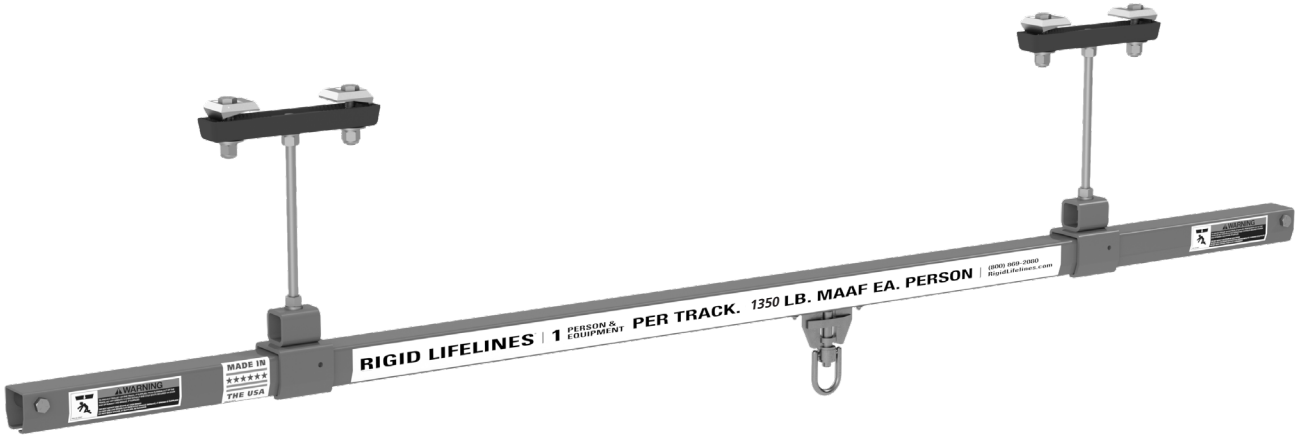

ANCHOR TRACK

This manual is for various mounting types and plain and trussed track profiles.

ISO 9001:2015 Registered

Manual 103-0075

Effective Date: February 2025

WARNING

RIGID LIFELINES CONDITIONS OF USE AND WARNING STATEMENT

1. Read, understand, and follow the manual, assembly drawings, and warnings provided with your system **before** beginning installation.
2. This manual, and any other instructions, must be provided to the users of this equipment. The user must understand the equipment's proper use and limitations.
3. A fall event can result in serious injury or death. This equipment, when used properly, reduces the chances of those outcomes.
4. Always perform a hazard analysis **before use** that will identify impact hazards, swing hazards, or any other hazards that may exist. Address and correct all hazards **before use**.
5. Always have a written rescue plan that defines who will rescue a fallen worker, what equipment will be used, and optimum rescue response time. If the same system will be used for rescue, a minimum of a two-man system must be specified.
6. Follow all current requirements of ANSI Z359 (or CSA Z259 in Canada).
7. Each component and system must be employed and maintained in accordance with all OSHA and ANSI standards.
8. Per OSHA and ANSI (or CSA Z259 in Canada) requirements, designate a competent person who can fulfill obligations of all regulations.
9. Note the maximum number of users and weight capacities are listed on a label on the system. Exceeding the capacities listed on this label can result in serious injury or death.
10. Always check for overhead hazards, such as power lines, trees, overhead structures, or walls, before using or moving system.
11. Any component replacement, addition, or change to any portion of the system must be evaluated by a Qualified Person as defined by OSHA standards.
12. Never use this system for material handling.
13. Never use the system with scaffolding.
14. Never use the system alone without a monitor. Use the buddy system when using fall protection. The monitor, or "buddy," does not need to be attached to the system, but just nearby supervising.
15. Consult with a qualified person for minimum fitness requirements for workers. Determination of minimum fitness levels of workers prior to use of system is by others.
16. For mobile systems—It is the responsibility of the user and their management's Competent Person to determine that the system's base is level, the masts are plumb, and that the entire, leveled system is stable before every use.
17. For movable track systems—Always use the system in work spaces that allow you to move the system's runway as close as possible to the center of the work area.
18. **Before each use**, inspect the system for bent, broken, cracked, or missing components.
19. A competent person must thoroughly inspect the system **annually** and **after each fall event.**
20. There should never be any type of loading past the end stops for any reason.
21. When connecting track sections on runway systems, track splice and truss splice plates are required. For trussed track, splice centers must be within maximum 48 inches of the hanger support centers unless otherwise specified. For plain track, splice track centers must be within maximum18 inches of the hanger support centers unless otherwise specified.
22. Systems with flush clamp hangers do not require sway bracing. However, all systems mounted to the ceiling must be laterally and longitudinally braced with sway bracing.

WARNING

RIGID LIFELINES CONDITIONS OF USE AND WARNING STATEMENT

23. If supplied, all drive systems are chain driven, and as a result, will experience some backlash in the drive assembly. Although backlash cannot be fully eliminated, it can be reduced by tightening the drive chain. Torque limiters, if supplied, require special attention. Most drive issues result from improper torque limiter adjustment or installation.
24. It is the customer's responsibility to confirm that the system and components will work in and are acceptable for their specific application and environment.
25. For foundation-mounted systems, bracing is not required for non-seismic applications. However, if any sway is perceived as undesirable, lateral bracing can be installed to the system by others. To achieve desired rigidity for a specific application, Rigid Lifelines® recommends consulting a professional engineer in your area to satisfy all codes and ordinances. For foundation-mounted systems, chemical anchor bolts supplied by others are required and must provide approximately 7000-pound pull-out force. More accurate pull-out forces are available upon request.
26. Engineering of any attachment points must be done by others.
27. Component appearances and dimensions shown are approximate and subject to change without notice. All catalog dimensions are developed using standard components for the spans and capacities. Substitution of optional trolleys or other components will affect certain dimensions.
28. All Rigid Lifelines Anchor Track™ Systems meet or exceed OSHA and ANSI requirements.
29. Never load the track at an angle greater than specified in the system's user manual.
30. Never use the system with the attachment point below the D-Ring of the harness.
31. Only the following self-retracting lanyard (SRL) design specifications are acceptable for use on Rigid Lifelines Anchor Track Systems:
    - **a)** 1350-pound maximum average arresting force (MAAF)
    - **b)** 4.5 feet-per-second lock up speed
    - **c)** Disk or drum braking mechanism
    - **d)** Wire rope SRL's can be used for indoor or outdoor applications
    - **e)** Fabric or web SRL's can be used only for indoor applications
32. The following energy-absorbing lanyards are **not** acceptable: rip-stitch packs, shock packs, or stretchable energy.
33. Choose the shortest length SRL that will allow the workers to perform their job function. The shortest length SRL will reduce total fall distance by reducing "cable cinching" on the internal SRL pulley. Fabric lanyards stretch under load. The longer the lanyard, the longer the stretch.
34. Never use metallic cables or metallic SRL's around electrical power sources.
35. Only an ANSI (or CSA in Canada) full-body harness is acceptable for use on Rigid Lifelines Anchor Track Systems.
36. Never use body belts on this system.
37. Never add additional carabiners, D-Rings, shackles, or connecting hardware to this system.
38. On Traveling Bridge Anchor Track Systems, always position the bridge(s) directly overhead of worker(s) at all times.
39. If a boom is provided, never apply a lateral load at the boom tip.
40. Never deviate from the above unless you have written permission and authorization from Rigid Lifelines.

WARNING

Follow the Inspection Checklists in this manual: review the first checklist before each use and the second checklist for after a fall event and annual inspections.

NEVER EXCEED 30 DEGREES OFF-PLUMB (OFF-CENTER) LOADING.

WARNING

This system must be used with an ANSI-rated self-retracting lanyard (SRL).

If the system is used outdoors, it is highly recommended that a steel cable SRL with heavy-duty housing be used for improved durability against UV radiation and moisture.

A web strap ANSI-rated SRL may be acceptable for use as long as a Competent Person has evaluated the situation and determined that there are no factors present that can have an immediate negative impact on the integrity of the SRL's webbing material AND that the Competent Person inspects the condition of the SRL's webbing and housing prior to each use.

WARNING

Completely retracting the SRL after each use (e.g., using a retrieval tagline) is essential: otherwise, the SRL's internal spring remains under tension, and it quickly loses its ability to properly arrest a freefall.

Retrieval taglines must never be used as an anchorage; doing so could result in serious injury or death.

TABLE OF CONTENTS

CONDITIONS OF USE AND WARNINGS STATEMENT ..... i-iii

SYSTEM APPLICATIONS 2

STANDARDS AND COMPLIANCE 2

REQUIRED TRAINING 2

ASSEMBLY INSTRUCTIONS 3

1. Equipment Needed for Assembly 3
2. Inventory 3

REQUIRED BRACING 3-4

ATTACHING THE TRACK SPLICE TO THE TRACK SECTIONS 4-6

CEILING-MOUNTED PLAIN TRACK HANGING OPTIONS 6

1. Flush-Parallel Mount 6-7
2. Flush-Cross Mount 8-9
3. Drop Rod 9-10
4. Sloped Drop Rod 11-12

CEILING MOUNTED BAR JOIST HANGER OPTION 13-14

CEILING-MOUNTED TRUSSED TRACK HANGING OPTIONS 15

1. Flush-Parallel Mount 15-16
2. Flush-Cross Mount 16-17
3. Drop Rod 18-19
4. Sloped Drop Rod 19-20

FINAL ASSEMBLY 21

RUNWAY ALIGNMENT TOLERANCE 22

INTERMEDIATE BUMPER INSTALLATION (IF SUPPLIED) 23

MAINTENANCE 24

LABELING 25

CEILING-MOUNTED MONORAIL INSPECTION CHECKLISTS 26

Ceiling-Mounted Monorail Anchor Track™ System 26

Annual Anchor Track™ System 27

PRODUCT WARRANTY COVERAGE 28

ABOUT RIGID LIFELINES® ..... BACK COVER

SYSTEM APPLICATIONS

The Ceiling-Mounted Monorail Anchor Track™ System is used for fall protection applications. This fall protection system is labeled with maximum number of users and maximum arresting force; follow all limitations as noted on system label. Each user must attach to this system using a personal fall arrest system. Monorail systems provide a rectangular area of coverage, allowing workers to move up to 30 degrees off-plumb. Off-plumb loading is not permitted past runway end stops.

COVERAGE AREA

STANDARDS AND COMPLIANCE

Please refer to local, state, and federal (OSHA) requirements governing occupational safety for additional information regarding personal fall arrest systems. The Ceiling-Mounted Monorail Anchor Track System meets or exceeds the requirements set forth in OSHA 1910, OSHA 1926, and ANSI Z359.

REQUIRED TRAINING

This system is intended to be used by people who are trained in its correct application and use. It is the responsibility of the users and the users' management to assure that they are familiar with these instructions and are trained in the correct use and care of this equipment. Authorized users must also be aware of the operating characteristics, application limits, and the consequences of improper use, which can result in serious injury or death.

Every application of fall protection must be part of a comprehensive managed fall protection program. Each program must include, but is not limited to:

- Hazard analysis
- Authorized person training
- Competent person implementation
- Rescue procedures
- Rescue training

The above list is not a comprehensive list. Specific applications may need to include additional items, such as administrative controls or engineered controls. A Qualified Fall Protection Engineer or OSHA Qualified Person should review the comprehensive managed fall protection program to ensure that it is adequate for your specific application. For more information on how to set up a proper Fall Protection Program within your facility, follow ANSI Z359.2 *Minimum Requirements for a Comprehensive Managed Fall Protection Program*, which is available at: www.assp.org.

ASSEMBLY INSTRUCTIONS

1. Equipment Needed for Assembly

a) This manual

b) Applicable safety equipment for workers' use during assembly, such as hard hats, safety shoes, etc.

c) Telescoping fork truck or crane (minimum lifting height: determined by installed system height; minimum capacity: 4,000 pounds)

d) Man lift/cherry picker (minimum height: determined by installed system height)

e) Measuring tape

f) Torque wrench

g) Lifting straps

h) Two six-inch by six-inch (or larger) wood blocks

i) Long carpenter's level or laser level

j) Wrench/Sockets sizes: 3/4 inch, 15/16 inch, and 1-1/8 inch

k) A spacious, level area for assembly (e.g., parking lot)

l) A way to mark hanger locations, such as a permanent marker

m) *FA-MT-ASSEMBLY SHEET 1 OF 2,* hereafter referred to as *Ceiling-Mounted Monorail Assembly Drawing*, will be included as a separate document.

n) *FA-MT-ASSEMBLY SHEET 2 OF 2,* hereafter referred to as *Ceiling-Mounted Monorail Label Placement Drawing*, will be included as a separate document.

o) The Anchor Trolley™ User Instruction Manual (Manual 103-0054), which is packaged with the Anchor Trolley, will be included as a separate document.

2. Inventory

a) Open all bundles and confirm that all components are accounted for: see *Building Materials Description* located in the top right corner of the Ceiling-Mounted Monorail Assembly Drawing. Note that the quantity of components in an assembly are multiplied by the number of the assemblies.

b) Check for damage to components that may have occurred during shipping.

REQUIRED BRACING

Refer to Figure 1 for Steps 1 Through 7

NOTE: Flush-mount applications do not require bracing.

1. Sway bracing is required for all ceiling-mounted monorail systems that use drop rods. Sway bracing resists lateral fall arrest forces, reduces lateral stresses on drop rods, and prevents system hardware from loosening and wear due to cyclic loading.
2. Sway bracing is required at each end of the system in both directions (laterally and longitudinally).
3. Intermediate bracing is required on one side of the monorail at each hanger assembly closest to the track splices (if required).
4. Rigid Lifelines is not liable for design of supporting structures or attachments of system hangers and/or bracing to supporting structures. However, Rigid Lifelines can provide the hangers and sway bracing pipe for the bracing. All supporting structures must be designed by a qualified person using all applicable local, state, and national code requirements.

5. Support structures of structural steel must be designed, fabricated, and/or erected per requirements of "American Institute of Steel Construction" (AISC). Special attention must be given to the requirements for impact and deflection forces to maintain the integrity of the complete building structure and system. The qualified person is liable for the final design.

6. All bracing shown in **Figure 1** is to be used as a guide only and should be considered as the minimum requirements for the ceiling-mounted monorail systems that use drop rods. Minimum pipe diameter is one inch for systems with drop rods. Systems with drop rods longer than 12 inches require special design attention by a qualified person.

7. Other bracing materials and designs may be acceptable if they are designed by a qualified person.

   A) NOTE: A qualified person must determine proper brace tube strength before installation.

Figure 1

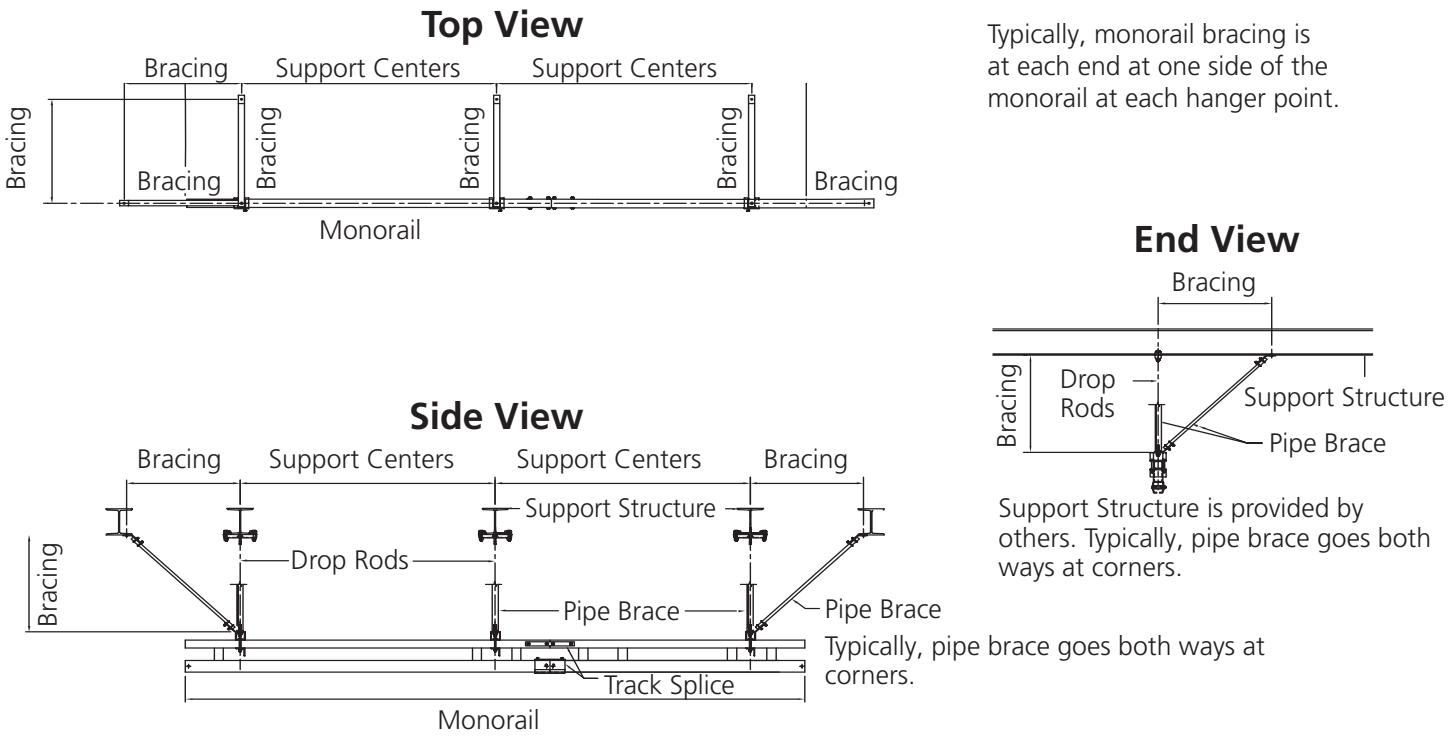

ATTACHING THE TRACK SPLICE TO THE TRACK SECTIONS

Refer to Figure 2 and Figure 3 for Steps 1 Through 9

1. Depending on the existing ceiling structure, span, and track series, track splices are required. If you purchased a system that requires a track splice, follow the steps below to attach the track splice to the track sections. If your system doesn't require a track splice, proceed to **Ceiling-Mounted Plain Track Hanger Options** on page 5 or **Ceiling-Mounted Trussed Track Hanger Options** on page 12.

2. Per **Figure 2**, the track splice joint (B) comes assembled using a sleeve with a total of eight set screws threaded into the top and both sides.

3. Per **Figure 2**, slide the track splice joint (B) over the end of the first track section, then butt the second track section against the first. Center the track splice joint (B) over both track section ends.

4. Per **Figure 2**, **securely tighten** the top two center set screws to push the track sections against the base of the track splice joint (B) until both track section bottom surfaces are aligned. Adjust both sets of side set screws so that the track slots are aligned and there is a smooth transition from one track section to the other.

5. Per **Figure 2**, after you properly align the track sections (see Figure 3 on page 4), tighten the top set screws first before tightening the side set screws. Do not over-tighten set screws.

6. Per **Figure 2**, bolt the track splice plates (B1) to the top of the track sections on both sides using nuts (B3) and bolts (B2). Torque the nuts (B3) to 51 foot-pounds.

   NOTE: The track splice plates (B1), nuts (B3), and bolts (B2) are only required for trussed track.

Figure 2

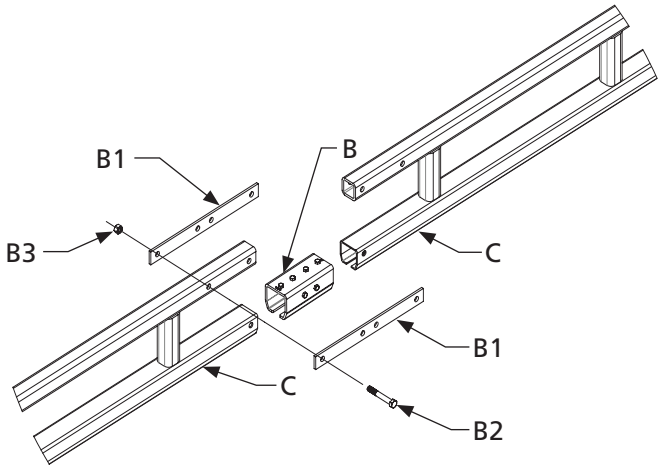

Item	Description
C	Track Sections
B	Track Splice Joint
B1	Track Splice Plate
B2	1/2-inch Hex Head Bolt
B3	1/2-inch Hex Locknut

7. Per **Figure 3**, the track splice joint (B) must be properly aligned with the track sections.

Figure 3

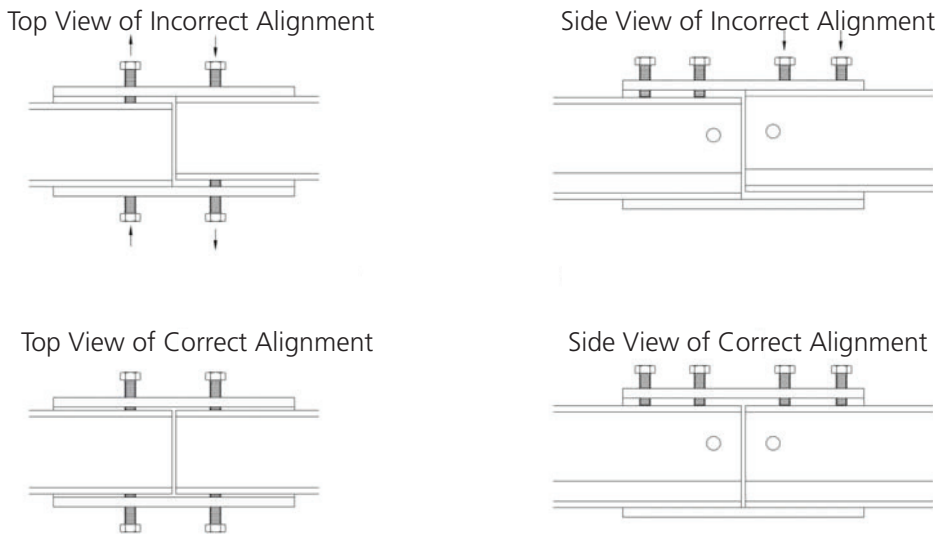

8. If you ordered a multiple track system, repeat steps **2.** through **7.** to attach the remaining track splice(s) to the track sections.

9. Refer to **Detail "B"** below for an illustration of the properly attached track splice to the track sections.

Detail "B" (Track Splice to Track Sections)

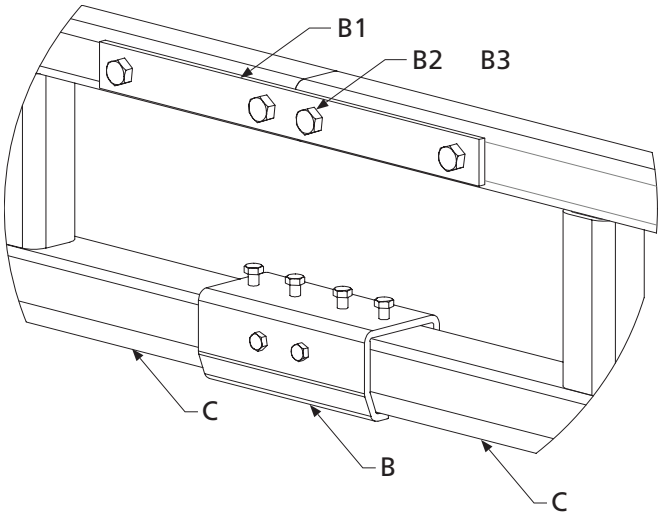

Item	Description
C	Track Sections
B	Track Splice Joint
B1	Track Splice Plate
B2	1/2-inch Hex Head Bolt
B3	1/2-inch Hex Locknut

CEILING-MOUNTED PLAIN TRACK HANGING OPTIONS

1. Flush-Parallel Mount

Refer to Figure 4 for Steps A Through Q

a) Ensure that track splices (B in *Ceiling-Mounted Monorail Assembly Drawing*), if supplied, have been installed per **ATTACHING THE TRACK SPLICE TO THE TRACK SECTIONS** on pages 3-5.

b) Using a measuring tape and a permanent marker, measure and mark 12 inches in from each end of the track for standard overhang. Also measure and mark your support spacing requirements. These locations are where the hanger kits (A in *Ceiling-Mounted Monorail Assembly Drawing*) should be installed on the track.

NOTE: 12-inch overhang is standard. Refer to your Final Fabrication Drawing for correct overhang lengths and support spacing for your specific system.

c) Per **Figure 4,** slide all of the hanger brackets (7) onto the track so that the welded top plate on the hanger bracket (7) is facing up away from the track.

d) Per **Figure 4,** slide an end hanger bracket (7) onto the marked spot on the track so that the welded top plate on the hanger bracket (7) is facing up away from the track.

e) Per **Figure 4, securely tighten** the side set screw to align the track against the side of the hanger bracket (7). Do not over tighten the set screw.

NOTE: The hanger bracket (7) comes with a set screw threaded into the side. It doesn't matter which side. However, ensure that each hanger bracket (7) has the set screw threaded into the same side.

f) Per **Figure 4,** insert bolts (3) through beam clips (2), clipped washers (5), and spacers (6) so that the clipped washers (5) are between the beam clips (2) and spacers (6).

NOTE: Clipped washers (5) may be required depending on the flange thickness. If clipped washers (5) are supplied, ensure that the flat edge of the clipped washers (5) face away from the center of the welded top plate of the hanger bracket (7). Spacers (6) are only required on systems using splices (B in *Ceiling-Mounted Monorail Assembly Drawing*).

g) Per **Figure 4,** insert bolts (3) and attached components (2, 5, and 6) through the holes on top of the welded top plate of the hanger bracket (7) so that the beam clips (2), clipped washers (5), and spacers (6) are on top of the welded top plate of the hanger bracket (7).

Figure 4

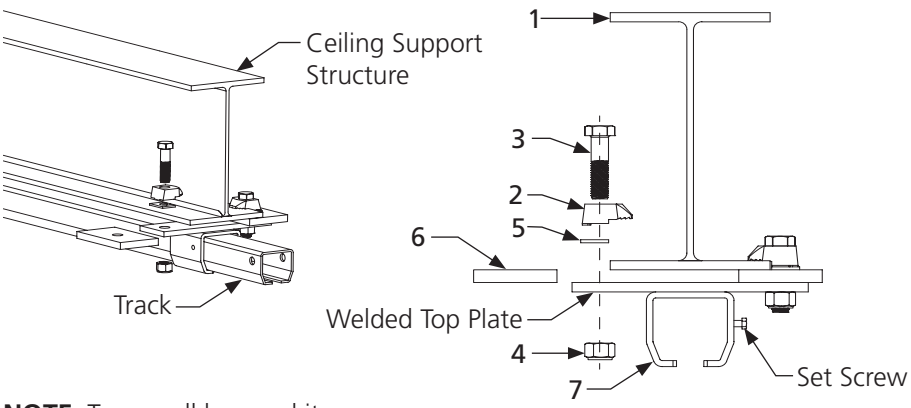

Item	Description
1	Ceiling Support Structure
2	Beam Clip
3	5/8-Inch Hex Bolt
4	5/8-Inch Hex Locknut
5	Clipped Washer
6	Spacer
7	Hanger Bracket

NOTE: Torque all hanger kit 5/8-inch diameter locknuts (4) to 108 foot-pounds.

NOTE: 700 Series Plain Track uses 3/4-inch hardware. Torque 3/4-inch hardware to 210 foot-pounds.

h) Per **Figure 4, hand tighten** the nuts (4) to the bolts (3).

i) Repeat steps **d)** through **h)** to attach another hanger bracket (7) to the marked spot on the other end of the track.

j) Using a crane and lifting straps, lift the track to the existing ceiling support structure (1).

k) Use a man lift or cherry picker to reach the track and ceiling support structure (1).

l) Per **Figure 4,** position the track and attached components (2, 3, 5, and 6) so that the beam clips (2) are on each side of the ceiling support structure (1).

NOTE: Track splice joints (B in *Ceiling-Mounted Monorail Assembly Drawing)* must be within 12 inches from the center of a ceiling support structure (1).

m) Per **Figure 4,** place the beam clips (2) so they are holding onto the bottom flange of the ceiling support structure (1). Adjust the beam clips (2) as needed by tightening or loosening the nuts (4) until the beam clips (2) sit properly on the bottom flange of the ceiling support structure (1). Securely tighten the beam clips (2) to the bottom flange of the ceiling support structure (1).

n) Repeat steps **k)** through **m)** to attach the track to the other end ceiling support structure (1).

o) Now that the track is attached to the end ceiling support structures (1), repeat steps **d)** through **h)** and **k)** through **m)** to attach the track to the remaining ceiling support structures (1).

p) After the track has been securely tightened to all ceiling support structures (1), ensure that all beam clips (2) are installed horizontally and level within plus or minus five degrees. Then torque all hanger kit 5/8-inch diameter locknuts (4) to 108 foot-pounds.

q) Go to page 22 for final installation instructions.

2. Flush-Cross Mount

Refer to Figure 5 for Steps A Through Q

a) Ensure that track splices (B in *Ceiling-Mounted Monorail Assembly Drawing*), if supplied, have been installed per **ATTACHING THE TRACK SPLICE TO THE TRACK SECTIONS** on pages 3-5.

b) Using a measuring tape and a permanent marker, measure and mark 12 inches in from each end of the track for standard overhang. Also measure and mark your support spacing requirements. These locations are where the hanger kits (A in *Ceiling-Mounted Monorail Assembly Drawing*) should be installed on the track.

NOTE: 12-inch overhang is standard. Refer to your Final Fabrication Drawing for correct overhang lengths and support spacing for your specific system.

c) Per **Figure 5,** slide all of the hanger brackets (6) onto the track so that the welded top plate on the hanger bracket (6) is facing up away from the track.

d) Per **Figure 5,** slide an end hanger bracket (6) onto the marked spot on the track so that the welded top plate on the hanger bracket (6) is facing up away from the track.

e) Per **Figure 5, securely tighten** the side set screw to align the track against the side of the hanger bracket (6). Do not over tighten the set screw.

NOTE: The hanger bracket (6) comes with a set screw threaded into the side. It doesn't matter which side. However, ensure that each hanger bracket (6) has the set screw threaded into the same side.

f) Per **Figure 5,** insert bolts (3) through beam clips (2) and clipped washers (5) so that the beam clips (2) are between the bolt head (3) and the clipped washer (5).

NOTE: Clipped washers (5) may be required depending on the flange thickness.

g) Per **Figure 5,** insert bolts (3) and attached components (2 and 5) through the holes on top of the welded top plate of the hanger bracket (6) so that the beam clips (2) and clipped washers (5) are on top of the welded top plate of the hanger bracket (6).

h) Per **Figure 5, hand tighten** the locknuts (4) to the bolts (3).

i) Repeat steps **d)** through **h)** to attach another hanger bracket (6) to the marked spot on the other end of the track.

j) Using a crane and lifting straps, lift the track to the existing ceiling support structure (1).

k) Use a man lift or cherry picker to reach the track and ceiling support structure (1).

Figure 5

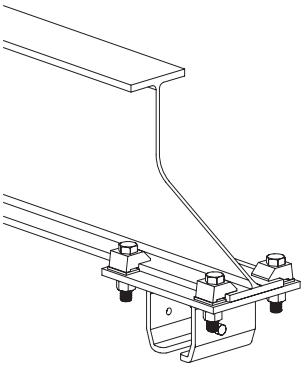

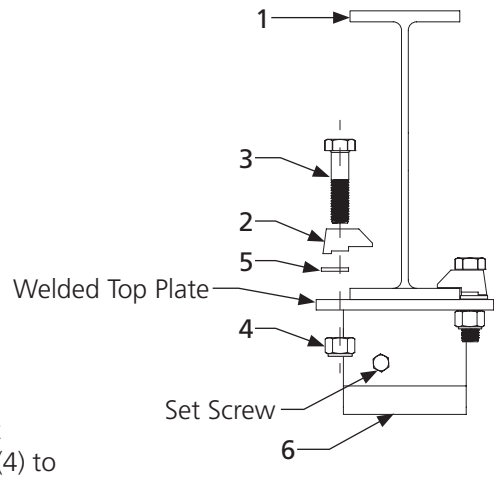

NOTE: Torque all hanger kit 5/8-inch diameter locknuts (4) to 108 foot-pounds.

Item	Description
1	Ceiling Support Structure
2	Beam Clip
3	5/8-Inch Hex Bolt
4	5/8-Inch Hex Locknut
5	Clipped Washer
6	Hanger Bracket

NOTE: 700 Series Plain Track uses 3/4-inch hardware. Torque 3/4-inch hardware to 210 foot-pounds.

l) Per **Figure 5,** position the track and attached components (2, 3, and 5) so that the beam clips (2) are on each side of the ceiling support structure (1).

NOTE: Track splice joints (B in *Ceiling-Mounted Monorail Assembly Drawing*) must be within 12 inches from the center of a ceiling support structure (1).

m) Per **Figure 5,** place the beam clips (2) so they are holding onto the bottom flange of the ceiling support structure (1). Adjust the beam clips (2) as needed by tightening or loosening the locknuts (4) until the beam clips (2) sit properly on the bottom flange of the ceiling support structure (1). Securely tighten the beam clips (2) to the bottom flange of the ceiling support structure (1).

n) Repeat steps **k)** through **m)** to attach the track to the other end ceiling support structure (1).

o) Now that the track is attached to the end ceiling support structures (1), repeat steps **d)** through **h)** and **k)** through **m)** to attach the track to the remaining ceiling support structures (1).

p) After the track has been securely tightened to all ceiling support structures (1), ensure that all beam clips (2) are installed horizontally and level within plus or minus five degrees. Then torque all hanger kit 5/8-inch diameter locknuts (4) to 108 foot-pounds.

q) Go to page 22 for final installation instructions.

3. Drop Rod

Refer to Figure 6 for Steps A Through Y

a) Ensure that track splices (B in *Ceiling-Mounted Monorail Assembly Drawing*), if supplied, have been installed per **ATTACHING THE TRACK SPLICE TO THE TRACK SECTIONS** on pages 3-5.

b) Using a measuring tape and a permanent marker, measure and mark 12 inches in from each end of the track for standard overhang. Also measure and mark your support spacing requirements. These locations are where the hanger kits (A in *Ceiling-Mounted Monorail Assembly Drawing*) should be installed on the track.

NOTE: 12-inch overhang is standard. Refer to your Final Fabrication Drawing for correct overhang lengths and support spacing for your specific system.

c) Per **Figure 6,** slide all of the hanger brackets (11) onto the track so that the welded top square on the hanger bracket (11) is facing up away from the track.

d) Per **Figure 6,** slide an end hanger bracket (11) onto the marked spot on the track so that the welded top square on the hanger bracket (11) is facing up away from the track.

e) Per **Figure 6, securely tighten** the side set screw to align the track against the side of the hanger bracket (11). Do not over tighten the set screw.

NOTE: The hanger bracket (11) comes with a set screw threaded into the side. It doesn't matter which side. However, ensure that each hanger bracket (11) has the set screw threaded into the same side.

f) Per **Figure 6,** screw a nut (9) onto the bottom of the threaded drop rod (10) and adjust so that about three inches of the drop rod (10) are showing from the bottom of the nut (9).

g) Per **Figure 6,** slide a lock washer (8) onto the threaded drop rod (10) so that the lock washer (8) is underneath the nut (9).

h) Per **Figure 6,** insert the bottom of the threaded drop rod (10) into the hole on the welded top square of the hanger bracket (11) until the lock washer (8) is flush against the top of the welded top square of the hanger bracket (11) and the nut (9) is flush against the lock washer (8).

i) Per **Figure 6,** screw a locknut (2) to the bottom of the threaded drop rod (10) and adjust so that an inch of drop rod (10) is showing underneath the locknut (2).

j) Per **Figure 6,** screw a nut (9) onto the top of the threaded drop rod (10) so that about three inches of the drop rod (10) are showing from the top of the nut (9).

k) Per **Figure 6,** slide a lock washer (8) onto the threaded drop rod (10) so that the lock washer (8) is on top of the nut (9).

l) Per **Figure 6,** insert bolts (3) through beam clips (4) so that the beam clips (4) are underneath the bolt head (3).

m) Per **Figure 6,** insert bolts (3) and attached beam clips (4) through the bottom side holes in the body forging (5) so that the beam clips (4) are on top of the body forging (5).

n) Per **Figure 6, hand tighten** locknuts (7) and flat washers (6) to the bolts (3) so that the flat washers (6) are between the body forging (5) and locknuts (7).

o) Per **Figure 6,** insert the top of the threaded drop rod (10) into the bottom middle hole of the body forging (5) until the lock washer (8) is flush against the bottom of the body forging (5) and the nut (9) is flush against the lock washer (8).

p) Per **Figure 6,** screw a locknut (2) to the top of the threaded drop rod (10) and adjust so that an inch of drop rod (10) is showing above the locknut (2).

q) Repeat steps **d)** through **p)** to attach another hanger bracket (11) to the marked spot on the other end of the track.

r) Using a crane and lifting straps, lift the track to the existing ceiling support structure (1).

s) Use a man lift or cherry picker to reach the track and ceiling support structure (1).

t) Per **Figure 6,** position the track and attached components (2 through 11) so that the beam clips (4) are on each side of the ceiling support structure (1).

NOTE: Track splice joints (B in *Ceiling-Mounted Monorail Assembly Drawing*) must be within 12 inches from the center of a ceiling support structure (1).

u) Per **Figure 6,** place the beam clips (4) so they are holding onto the bottom flange of the ceiling support structure (1). Adjust the beam clips (4) as needed by tightening or loosening the locknuts (7) until the beam clips (4) sit properly on the bottom flange of the ceiling support structure (1). Securely tighten the beam clips (4) to the bottom flange of the ceiling support structure (1).

v) Repeat steps **r)** through **u)** to attach the track to the other end ceiling support structure (1).

w) Now that the track is attached to the end ceiling support structures (1), repeat steps **d)** through **p)** and **r)** through **u)** to attach the track to the remaining ceiling support structures (1).

x) After the track has been securely tightened to all ceiling support structures (1), ensure that all beam clips (4) are installed horizontally and level within plus or minus five degrees. Then torque all hanger kit 5/8-inch diameter locknuts (7) and drop rod 5/8-inch diameter locknuts (2) to 108 foot-pounds.

y) Go to page 22 for final installation instructions.

Figure 6

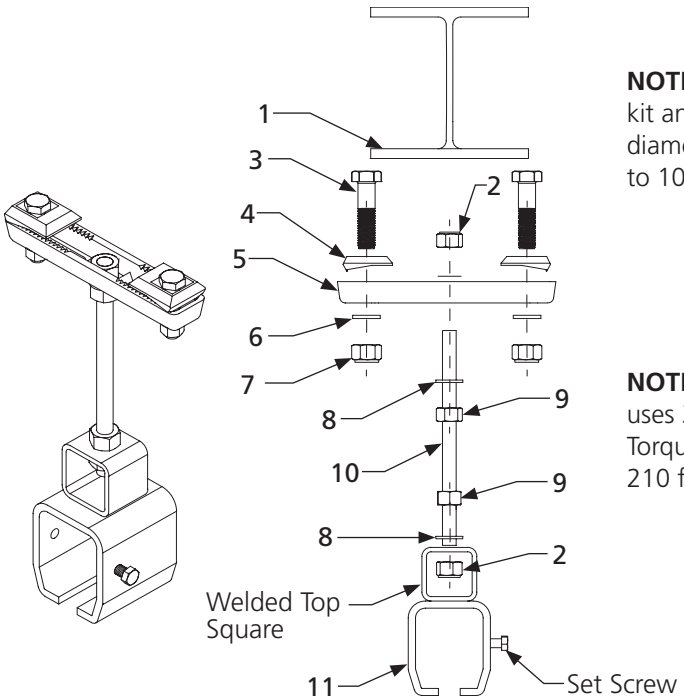

NOTE: Torque all hanger kit and drop rod 5/8-inch diameter locknuts (2 and 7) to 108 foot-pounds.

NOTE: 700 Series Plain Track uses 3/4-inch hardware. Torque 3/4-inch hardware to 210 foot-pounds.

Item	Description
1	Ceiling Support Structure
2	5/8-Inch Hex Locknut
3	5/8-Inch Hex Bolt
4	Beam Clip
5	Body Forging
6	5/8-Inch Flat Washer
7	5/8-Inch Hex Locknut
8	5/8-Inch Lock Washer
9	5/8-Inch Hex Nut
10	5/8-Inch Drop Rod
11	Hanger Bracket

4. Sloped Drop Rod

Refer to Figure 7 for Steps A Through X

a) Ensure that track splices (B in *Ceiling-Mounted Monorail Assembly Drawing*), if supplied, have been installed per **ATTACHING THE TRACK SPLICE TO THE TRACK SECTIONS** on pages 3-5.

b) Using a measuring tape and a permanent marker, measure and mark 12 inches in from each end of the track for standard overhang. Also measure and mark your support spacing requirements. These locations are where the hanger kits (A in *Building Materials Description*) should be installed on the track.

NOTE: 12-inch overhang is standard. Refer to your Final Fabrication Drawing for correct overhang lengths and support spacing for your specific system.

c) Per **Figure 7,** slide all of the hanger brackets (13) onto the track so that the welded top square on the hanger bracket (13) is facing up away from the track.

d) Per **Figure 7,** slide an end hanger bracket (13) onto the marked spot on the track so that the welded top square on the hanger bracket (13) is facing up away from the track.

e) Per **Figure 7, securely tighten** the side set screw to align the track against the side of the hanger bracket (13). Do not over tighten the set screw.

NOTE: The hanger bracket (13) comes with a set screw threaded into the side. It doesn't matter which side. However, ensure that each hanger bracket (13) has the set screw threaded into the same side.

f) Per **Figure 7,** screw a nut (11) onto the bottom of the threaded drop rod (4) and adjust so that about three inches of the drop rod (4) are showing from the bottom of the nut (11).

g) Per **Figure 7,** slide a lock washer (12) onto the threaded drop rod (4) so that the lock washer (12) is underneath the nut (11).

h) Per **Figure 7,** insert the bottom of the threaded drop rod (4) into the hole on the welded top square of the hanger bracket (13) until the lock washer (12) is flush against the top of the welded top square of the hanger bracket (13) and the nut (11) is flush against the lock washer (12).

i) Per **Figure 7,** screw a locknut (9) to the bottom of the threaded drop rod (4) and adjust so that an inch of drop rod (4) is showing underneath the locknut (9).

j) Per **Figure 7,** insert the top of the drop rod (4) through the middle hole on the bottom of the beam clamp channel (2) so that three inches of drop rod (4) are showing.

k) Per **Figure 7,** slide bevel washers (10) and a spherical washer (8) onto the threaded drop rod (4) so that the spherical washer (8) is on top of the bevel washers (10).

NOTE: The degree of slope determines how many bevel washers (10) are required.

l) Per **Figure 7, hand tighten** a locknut (9) and a hex nut (11) onto the top of the drop rod (4) so that the locknut (9) is between the hex nut (11) and spherical washer (8).

m) Per **Figure 7,** insert bolts (5) through flat washers (7) and the bottom slots in the beam clamp channel (2) so that the flat washers (7) are between the bolt heads (5) and the bottom of the beam clamp channel (2) and the bolt heads (5) are on the bottom of the beam clamp channel (2).

n) Per **Figure 7,** slide beam clamp clips (3) onto the bolts (5) and **hand tighten** locknuts (6) to the bolts (5).

NOTE: Ensure that the beam clamp clip wedges are facing away from the center of the beam clamp channel (2).

o) Repeat steps **d)** through **n)** to attach another hanger bracket (13) to the marked spot on the other end of the track.

p) Using a crane and lifting straps, lift the track to the existing ceiling support structure (1).

q) Use a man lift or cherry picker to reach the track and ceiling support structure (1).

r) Per **Figure 7,** position the track and attached components (2 through 13) so that the beam clamp clips (3) are on each side of the ceiling support structure (1).

NOTE: Track splice joints (B in *Ceiling-Mounted Monorail Assembly Drawing*) must be within 12 inches from the center of a ceiling support structure (1).

s) Per **Figure 7,** place the beam clamp clips (3) so they are holding onto the bottom flange of the ceiling support structure (1). Adjust the beam clamp clips (3) as needed by tightening or loosening the locknuts (6) until the beam clamp clips (3) sit properly on the bottom flange of the ceiling support structure (1), in the cutouts of beam clamp channel (2), and are an equal number of cutouts away from the center of the beam clamp channel (2). Ensure that the bolts (5) are as close as possible to the edge of bottom flange of the ceiling support structure (1).

t) Per **Figure 7,** securely tighten the locknuts (6) so that the beam clamp clips (3) are tight to the bottom flange of the ceiling support structure (1).

u) Repeat steps **q)** through **t)** to attach the track to the other end ceiling support structure (1).

v) Now that the track is attached to end ceiling support structures (1), repeat steps **d)** through **n)** and **q)** through **t)** to attach the track to the remaining ceiling support structures (1).

w) After the track has been securely tightened to all ceiling support structures (1), ensure that all beam clamp clips (3) are installed horizontally and level within plus or minus five degrees. Then torque the top drop rod 5/8-inch diameter nuts (11) to 108 foot-pounds and all beam clamp and bottom drop rod 5/8-inch diameter locknuts (6 and 9) to 108 foot-pounds.

x) Go to page 22 for final installation instructions.

Figure 7

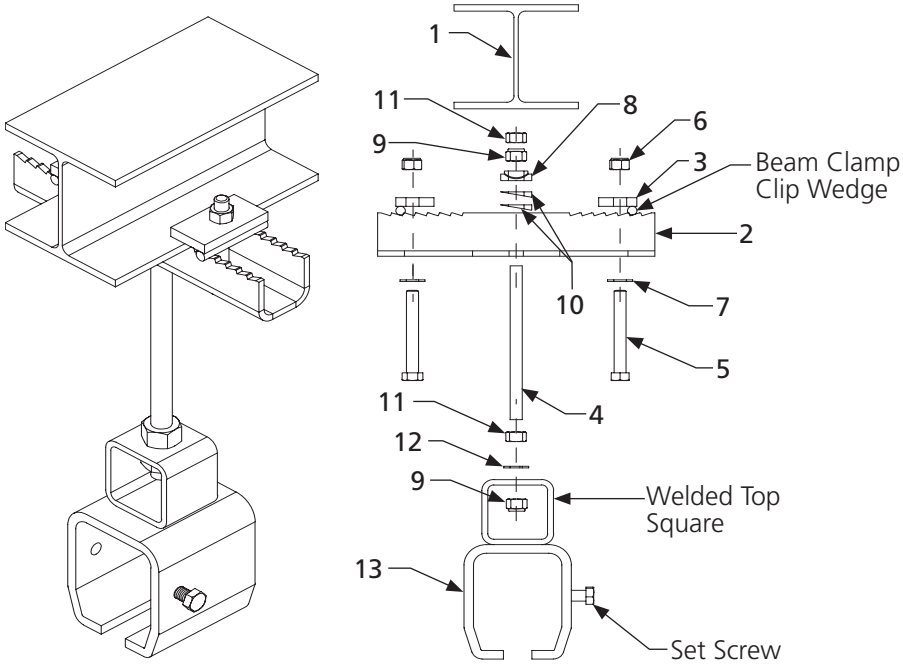

Item	Description
1	Ceiling Support Structure
2	Beam Clamp Channel
3	Beam Clamp Clip
4	5/8-Inch Drop Rod
5	5/8-Inch Hex Bolt
6	5/8-Inch Hex Locknut
7	5/8-Inch Flat Washer
8	Spherical Washer
9	5/8-Inch Hex Locknut
10	5/8-Inch Bevel Washer
11	5/8-Inch Hex Nut
12	5/8-Inch Lock Washer
13	Hanger Bracket

NOTE: 700 Series Plain Track uses 3/4-inch hardware. Torque 3/4-inch hardware to 210 foot-pounds.

NOTE: Torque all hanger kit and drop rod 5/8-inch diameter locknuts (6 and 9) to 108 foot-pounds.

CEILING MOUNTED BAR JOIST HANGER OPTION

Refer to Figure 8 for Steps

a) Ensure that all the components are present in the FA fastener kit before installation. They will be required for the bar joist hanger installation.

b) Per **Figure 8,** take your threaded rod 5/8″-11 (8) and screw on the hex locknut 5/8″-11 (5) a maximum of 1″ from the top of the threaded rod with the flat side facing the longer end of the threaded rod.

c) Slide on a flat washer (6) onto the threaded rod against the bottom of the hex locknut.

d) Insert the threaded rod with the flat washer and hex locknut through the hole in the top of the bar joist top clamp with the flat washer laying flush against the top of the clamp. The teeth of the bar joist top clamp should be facing away from the flat washer and be touching the verticle section of the bar joist.

e) Per **Figure 8,** if the air gap between the verticle section of the bar joist is **15/16″ or less** you will skip the installation of the two hex nuts 5/8″(4) indicated above the bar joist bottom clamp.

f) Per **Figure 8,** if the air gap between the verticle section of the bar joist is between **15/16″ to 1-1/16″** you will install a single hex nut 5/8″ (4) indicated above the bar joist bottom clamp. Screw the hex nut until it rests between the verticle sections of the bar joist. The orientation of the hex nut will need to resemble **Figure 8.1**. You may have to adjust the threaded rod to get the hex nut into position.

g) Per **Figure 8,** if the air gap between the verticle section of the bar joist is **1-1/16″ or greater** you will install both hex nuts 5/8″ (4) indicated above the bar joist bottom clamp. Screw the higher of the two hex nuts onto the 5/8″ threaded rod until it is 1/2″ above the bottom of the bar joist. Then screw on the second hex nuts and torque it against the first installed hex nut ensuring it reaches 108 lbs. The torqued hex nut needs to resemble **Figure 8.2**. You may have to adjust the threaded rod to get the hex nut into position.

h) Per **Figure 8,** slide the bar joist bottom clamp onto the bottom of the threaded rod 5/8″ (8) with the ends facing up towards the bar joist. Then screw on a hex nut 5/8″ (4) and tighten it until the bar joist bottom clamp is flush against the bottom of the bar joist with the curved ends of the bar joist bottom clamp each in contact with both horizontal sections of the bar joist.

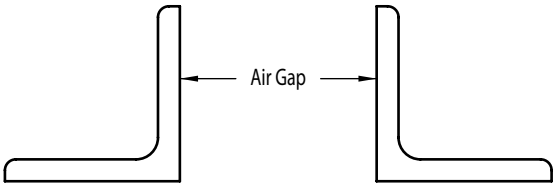

NOTE: Locking hex nut needs to be torqued to 108 lbs.

Figure 8

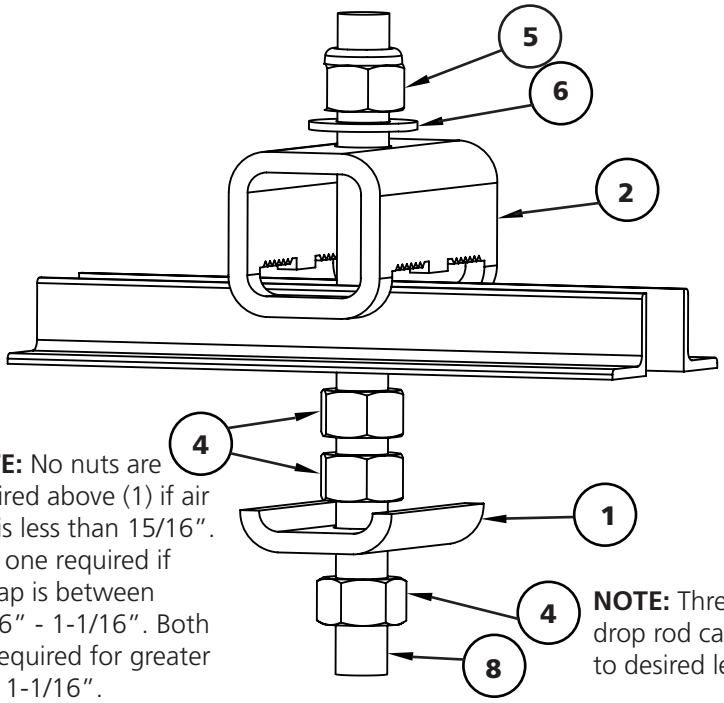

NOTE: No nuts are required above (1) if air gap is less than 15/16″. Only one required if air gap is between 15/16″ - 1-1/16″. Both are required for greater than 1-1/16″.

NOTE: Threaded drop rod can be cut to desired length.

Item	Description	Quantity
1	Bar Joist Bottom Clamp	1
2	Bar Joist Top Clamp	1
3	Hex Nut 3/8″-16	8
4	Hex Nut 5/8″-11	3
5	Locking Hex Nut 5/8″-11	1
6	Flat Washer 5/8″	1
7	Threaded Rod 3/8″-16	2
8	Threaded Rod 5/8″-11	1
9	Bar Joist Hanger	4

i) Torque the locking hex nut 5/8″ (5) to 108 lbs.

j) Per **Figure 8.5,** screw on a hex nut 3/8″ (3) onto each end of a threaded rod 3/8″ (7) until both sides are slightly closer together than the width of the flange on the bar joist.

k) Per **Figure 8.5,** slide a bar joist hanger (9) onto one side of the threaded rod 3/8″ (7) with the hook facing inwards. Then screw on a hex nut 3/8″ (3) onto the same side loosely so adjustments can be made.

l) **Repeat step j** for the opposite side of the threaded rod 3/8″ (7) making sure to leave space for adjustments during installation.

m) Per **Figure 8.5,** raise the threaded rod with the bar joist hangers to hook around the edges of the flange ensuring 2-1/4″ spacing from the bar joist top clamp. Then tighten the hex nuts on each side until the bar joist hooks are torqued and the hooks tight on each side.

n) **Repeat steps j-l** for the remaining threaded rod 3/8″ (7), hex nuts 3/8″ (3), and bar joist hangers (9) on the other side of the bar joist top clamp.

o) Go to page 22 for final installation instructions.

Figure 8.1

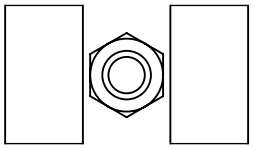

Figure 8.2

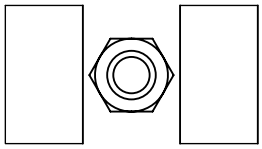

Figure 8.3

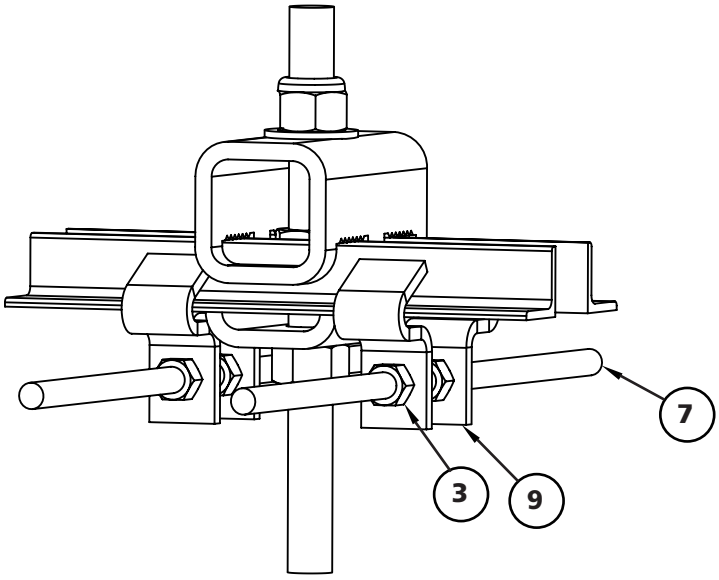

Figure 8.4

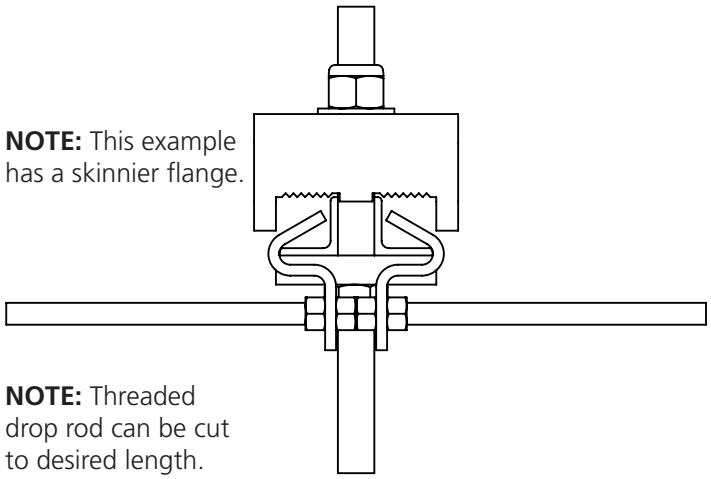

NOTE: This example has a skinnier flange.

NOTE: Threaded drop rod can be cut to desired length.

Figure 8.5

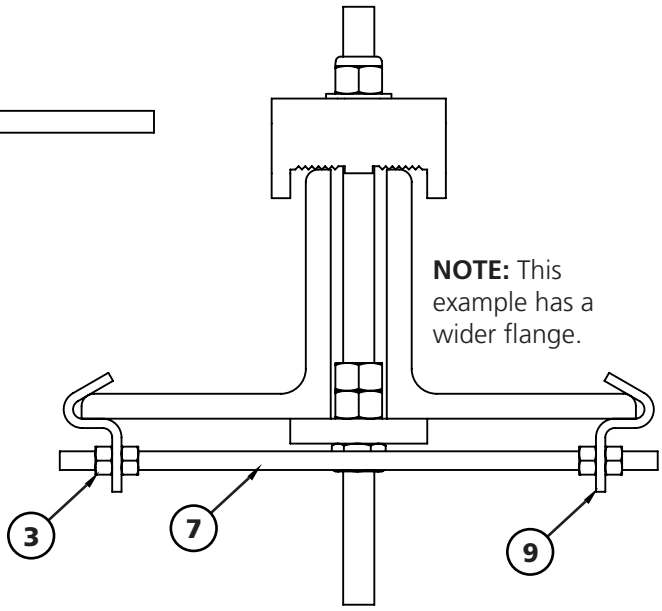

NOTE: This example has a wider flange.

CEILING-MOUNTED TRUSSED TRACK HANGING OPTIONS

1. Flush-Parallel Mount

Refer to Figure 9 for Steps A Through Q

a) Ensure that track splices (B in *Ceiling-Mounted Monorail Assembly Drawing*), if supplied, have been installed per **ATTACHING THE TRACK SPLICE TO THE TRACK SECTIONS** on page 3-5.

b) Using a measuring tape and a permanent marker, measure and mark 18 inches in from each end of the track (9) for standard overhang. Also measure and mark your support spacing requirements. These locations are where the hanger kits (A in *Ceiling-Mounted Monorail Assembly Drawing*) should be installed on the track (9).

NOTE: 18-inch overhang is standard. Refer to your Final Fabrication Drawing for correct overhang lengths and support spacing for your specific system.

c) Per **Figure 9,** insert four bolts (2) through four beam clips (3) and clipped washers (4) so that the clipped washers (4) are underneath the beam clips (3).

d) Per **Figure 9,** insert the bolts (2), beam clips (3), and clipped washers (4) through the truss clamp plate (5) so that the components (2, 3, and 4) are on top of the truss clamp plate (5).

NOTE: Clipped washers (4) may be required depending on the flange thickness. If clipped washers (4) are supplied, ensure that the flat edge of the clipped washers (4) face away from the center of the truss clamp plate (5).

e) Per **Figure 9,** place the end of the truss clamp plate (5) and attached hardware (2, 3, and 4) on the marked spot on the end of the track (9) so that the bolts (2) hang down on both sides of the track (9). Ensure that the end of the truss clamp plate (5) is 18 inches in from each end of the track (9) for standard overhang.

f) Per **Figure 9,** place the hanger weldment (6) under the top truss of the track (9) so that the hanger weldment tubes are on both sides of the track (9) and resting underneath the truss clamp plate (5).

g) Per **Figure 9,** insert the bolts (2) and attached components (3 and 4) through the holes on the hanger weldment (6).

h) Per **Figure 9, hand tighten** flat washers (7) and locknuts (8) to the bolts (2) so that the flat washers (7) are between the bottom of the hanger weldment (6) and locknuts (8).

i) Repeat steps **c)** through **h)** to attach another hanger kit (2 through 8) to the marked spot on the other end of the track (9).

j) Using a crane and lifting straps, lift the track (9) to the existing ceiling support structure (1).

k) Use a man lift or cherry picker to reach the track (9) and ceiling support structure (1).

l) Per **Figure 9,** position the track (9) and attached components (2 through 8) so that the beam clips (3) are on each side of the ceiling support structure (1). Some loosening of the locknuts (8) may be required.

NOTE: Track splice joints (B in *Ceiling-Mounted Monorail Assembly Drawing*) must be within 48 inches from the center of a ceiling support structure (1).

m) Per **Figure 9,** place the beam clips (3) so they are holding onto the bottom flange of the ceiling support structure (1). Adjust the beam clips (3) as needed by tightening or loosening the locknuts (8) until the beam clips (3) sit properly on the bottom flange of the ceiling support structure (1). Securely tighten the beam clips (3) to the bottom flange of the ceiling support structure (1).

n) Repeat steps **k)** through **m)** to attach the track (9) to the other end ceiling support structure (1).

o) Now that the track (9) is attached to the end ceiling support structures (1), repeat steps **c)** through **h)** and **k)** through **m)** to attach the track (9) to the remaining ceiling support structures (1).

p) After the track (9) has been securely tightened to all ceiling support structures (1), ensure that all beam clips (3) are installed horizontally and level within plus or minus five degrees. Then torque all hanger kit nuts (8) to 108 foot-pounds.

q) Go to page 22 for final installation instructions.

Figure 9

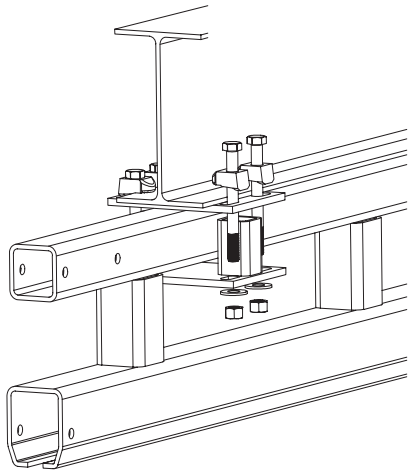

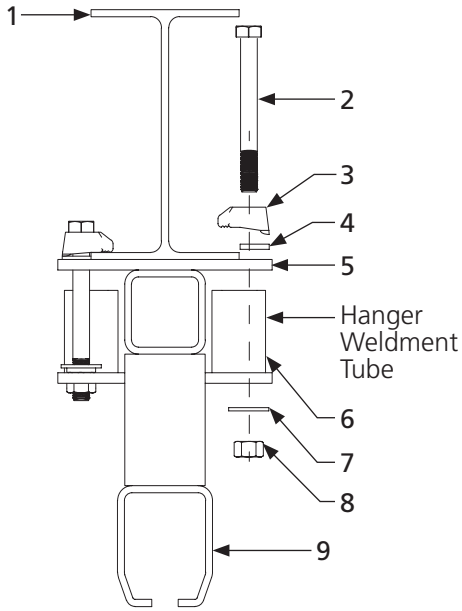

Item	Description
1	Ceiling Support Structure
2	5/8-Inch Hex Bolt
3	5/8-Inch Beam Clip
4	5/8-Inch Clipped Washer
5	Truss Clamp Plate
6	Hanger Weldment
7	5/8-Inch Flat Washer
8	5/8-Inch Hex Locknut
9	Track

NOTE: 700 Series track uses 3/4-inch hardware. Torque 3/4-inch hardware to 210 foot-pounds.

NOTE: Torque all hanger kit 5/8-inch diameter locknuts (8) to 108 foot-pounds.

2. Flush-Cross Mount

Refer to Figure 10 for Steps A Through O

a) Ensure that track splices (B in *Ceiling-Mounted Monorail Assembly Drawing*), if supplied, have been installed per **ATTACHING THE TRACK SPLICE TO THE TRACK SECTIONS** on pages 3-5.

b) Using a measuring tape and a permanent marker, measure and mark 18 inches in from each end of the track (9) for standard overhang. Also measure and mark your support spacing requirements. These locations are where the hanger kits (A in *Ceiling-Mounted Monorail Assembly Drawing*) should be installed on the track (9).

NOTE: 18-inch overhang is standard. Refer to your Final Fabrication Drawing for correct overhang lengths and support spacing for your specific system.

c) Per **Figure 10,** insert four bolts (2) through four beam clips (3) and clipped washers (4) so that the clipped washers (4) are underneath the beam clips (3).

d) Per **Figure 10,** insert the bolts (2), beam clips (3), and clipped washers (4) through the truss clamp plate (5) so that the components (2, 3, and 4) are on top of the truss clamp plate (5).

NOTE: Clipped washers (4) may be required depending on the flange thickness. If clipped washers (4) are supplied, ensure that the flat edge of the clipped washers (4) face away from the center of the truss clamp plate (5).

e) Per **Figure 10,** place the end of the truss clamp plate (5) and attached hardware (2, 3, and 4) on the marked spot on the end of the track (9) so that the bolts (2) hang down on both sides of the track (9). Ensure that the end of the truss clamp plate (5) is 18 inches in from each end of the track (9) for standard overhang.

f) Per **Figure 10, securely tighten** the angle truss clamps (8) to the bolts (2) using flat washers (6) and locknuts (7) so that the flat washers (6) are between the angle truss clamps (8) and locknuts (7). Ensure that the angle truss clamps (8) form *inverted-L's.*

g) Repeat steps **c)** through **f)** to attach another hanger kit (2 through 8) to the marked spot on the other end of the track (9).

h) Using a crane and lifting straps, lift the track (9) to the existing ceiling support structure (1).

i) Use a man lift or cherry picker to reach the track (9) and ceiling support structure (1).

j) Per **Figure 10,** position the track (9) and attached components (2 through 8) so that the beam clips (3) are on each side of the ceiling support structure (1).

NOTE: Track splice joints (B in *Ceiling-Mounted Monorail Assembly Drawing*) must be within 48 inches from the center of a ceiling support structure (1).

k) Per **Figure 10,** place the beam clips (3) so they are holding onto the bottom flange of the ceiling support structure (1). Adjust the beam clips (3) as needed by tightening or loosening the locknuts (7) until the beam clips (3) sit properly on the bottom flange of the ceiling support structure (1). Securely tighten the beam clips (3) to the bottom flange of the ceiling support structure (1).

l) Repeat steps **i)** through **k)** to attach the track (9) to the other end ceiling support structure (1).

m) Now that the track (9) is attached to the end ceiling support structures (1), repeat steps **c)** through **f)** and **i)** through **k)** to attach the track (9) to the remaining ceiling support structures (1).

n) After the track (9) has been securely tightened to all ceiling support structures (1), ensure that all beam clips (3) are installed horizontally and level within plus or minus five degrees. Then torque all hanger kit 5/8-inch diameter locknuts (7) to 108 foot-pounds.

o) Go to page 22 for final installation instructions.

Figure 10

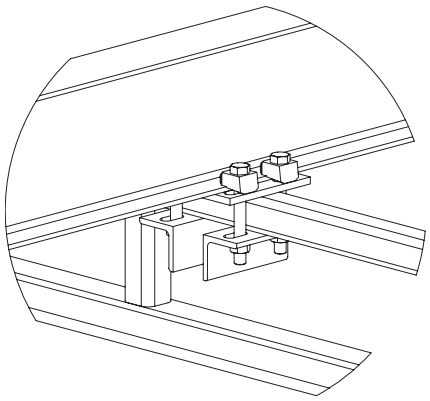

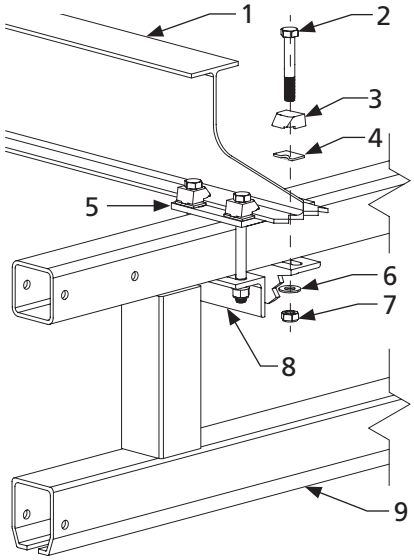

NOTE: Torque all hanger kit 5/8-inch diameter locknuts (7) to 108 foot-pounds.

Item	Description
1	Ceiling Support Structure
2	5/8-Inch Hex Bolt
3	5/8-Inch Beam Clip
4	5/8-Inch Clipped Washer
5	Truss Clamp Plate
6	5/8-Inch Flat Washer
7	5/8-Inch Locknut
8	Angle Truss Clamp
9	Track

NOTE: 700 Series track uses 3/4-inch hardware. Torque 3/4-inch hardware to 210 foot-pounds.

3. Drop Rod

Refer to Figure 11 for Steps A Through Y

a) Ensure that track splices (B in *Ceiling-Mounted Monorail Assembly Drawing*), if supplied, have been installed per **ATTACHING THE TRACK SPLICE TO THE TRACK SECTIONS** on page 3-5.

b) Using a measuring tape and a permanent marker, measure and mark 18 inches in from each end of the track (15) for standard overhang. Also measure and mark your support spacing requirements. These locations are where the hanger kits (A in *Ceiling-Mounted Monorail Assembly Drawing*) should be installed on the track (15).

NOTE: 18-inch overhang is standard. Refer to your Final Fabrication Drawing for correct overhang lengths and support spacing for your specific system.

c) Per **Figure 11,** insert two bolts (11) through two flat washers (12) and the bottom slots of the hanger truss bracket (10) so that the flat washers (12) are between the bolt heads and the bottom of the hanger truss bracket (10).

d) Per **Figure 11,** place the hanger truss bracket (10) on the marked spot on the end of the track (15) so that the bolts (11) hang down on both sides of the track (15). Ensure that the end of the hanger truss bracket (10) is 18 inches from the end of the track (15) for standard overhang.

e) Per **Figure 11, hand tighten** the angle truss clamps (14) to the bolts (11) using flat washers (12) and locknuts (13) so that the flat washers (12) are between the angle truss clamps (14) and locknuts (13). Ensure that the angle truss clamps (14) form *inverted-L's.*

f) Per **Figure 11,** screw a nut (8) onto the bottom of the threaded drop rod (9) and adjust so that about three inches of the drop rod (9) are showing from the bottom of the nut (8).

g) Per **Figure 11,** slide a lock washer (7) onto the threaded drop rod (9) so that the lock washer (7) is underneath the nut (8).

h) Per **Figure 11,** insert the bottom of the threaded drop rod (9) into the top hole of the hanger truss bracket (10) until the lock washer (7) is flush against the top of the hanger truss bracket (10) and the nut (8) is flush against the lock washer (7).

i) Per **Figure 11,** screw a locknut (6) to the bottom of the threaded drop rod (9) and adjust so that an inch of drop rod (9) is showing underneath the locknut (6).

j) Per **Figure 11,** screw a nut (8) onto the top of the threaded drop rod (9) and adjust so that about three inches of the drop rod (9) are showing from the top of the nut (8).

k) Per **Figure 11,** slide a lock washer (7) onto the threaded drop rod (9) so that the lock washer (7) is on top of the nut (8).

l) Per **Figure 11,** insert two bolts (2) through beam clips (3) so that the beam clips (3) are underneath the bolt head (2).

m) Per **Figure 11,** insert the bolts (2) and attached beam clips (3) through the bottom side holes in the body forging (4) so that the beam clips (3) are on top of the body forging (4).

n) Per **Figure 11, hand tighten** locknuts (6) and flat washers (5) to the bolts (2) so that the flat washers (5) are between the body forging (4) and locknuts (6).

o) Per **Figure 11,** insert the top of the threaded drop rod (9) into the bottom middle hole of the body forging (4) until the lock washer (7) is flush against the bottom of the body forging (4) and the nut (8) is flush against the lock washer (7).

p) Per **Figure 11,** screw a locknut (6) to the top of the threaded drop rod (9) and adjust so that an inch of drop rod (9) is showing above the locknut (6).

q) Repeat steps **c)** through **p)** to attach another hanger kit (2 through 14) to the marked spot on the other end of the track (15).

r) Using a crane and lifting straps, lift the track (15) to the existing ceiling support structure (1).

s) Use a man lift or cherry picker to reach the track (15) and ceiling support structure (1).

t) Per **Figure 11,** position the track (15) and attached components (2 through 14) so that the beam clips (3) are on each side of the ceiling support structure (1).

NOTE: Track splice joints (B in *Ceiling-Mounted Monorail Assembly Drawing*) must be within 48 inches from the center of a ceiling support structure (1).

u) Per **Figure 11,** place the beam clips (3) so they are holding onto the bottom flange of the ceiling support structure (1). Adjust the beam clips (3) as needed by tightening or loosening the locknuts (6) until the beam clips (3) sit properly on the bottom flange of the ceiling support structure (1). Securely tighten the beam clips (3) to the bottom flange of the ceiling support structure (1).

v) Repeat steps **r)** through **u)** to attach the track (15) to the other end ceiling support structure (1).

w) Now that the track (15) is attached to the end ceiling support structures (1), repeat steps **c)** through **p)** and **r)** through **u)** to attach the track (15) to the remaining ceiling support structures (1).

x) After the track (15) has been securely tightened to all ceiling support structures (1), ensure that all beam clips (3) are installed horizontally and level within plus or minus five degrees. Then torque all 5/8-inch locknuts (6) to 108 foot-pounds and all 1/2-inch locknuts (13) to 51 foot-pounds.

y) Go to page 22 for final installation instructions.

Figure 11

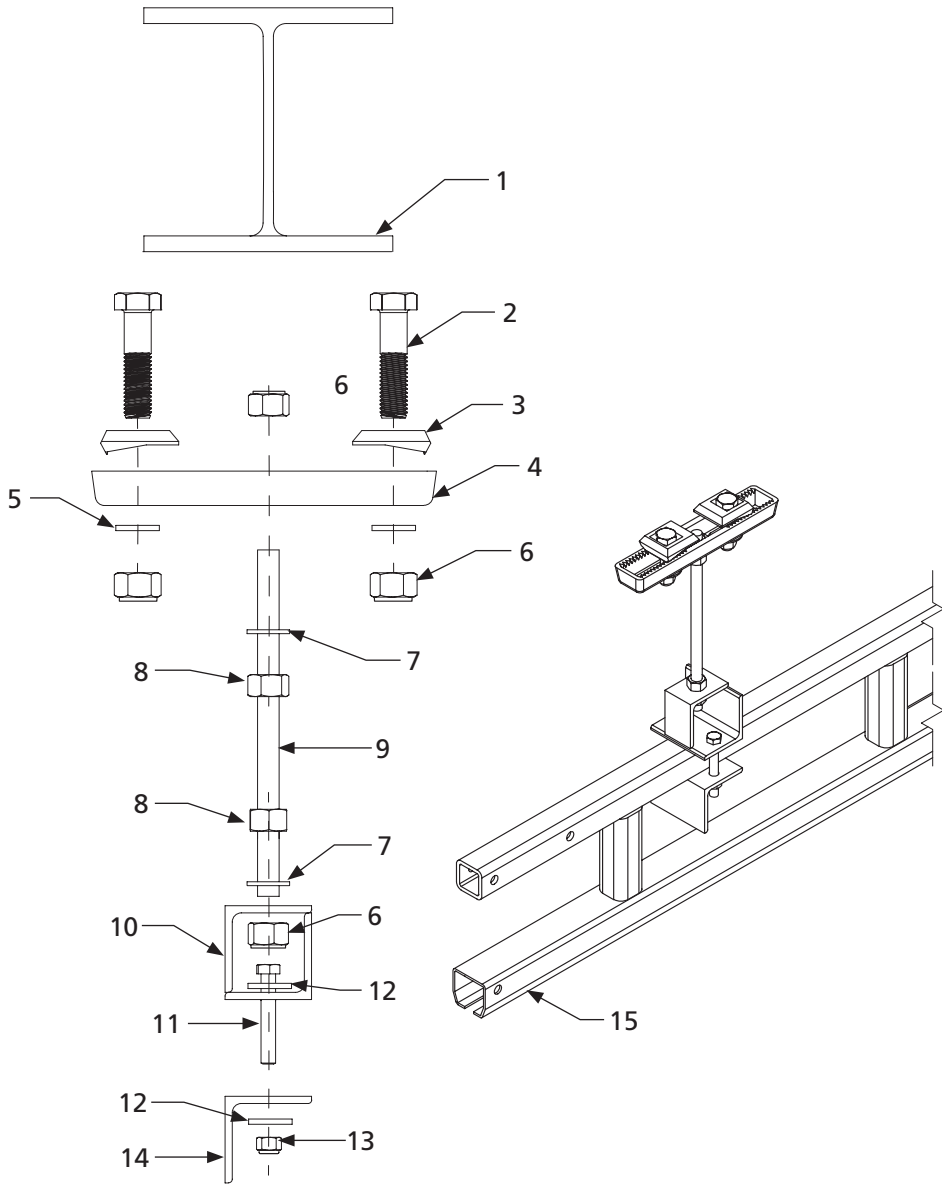

Item	Description
1	Ceiling Support Structure
2	5/8-Inch Hex Bolt
3	5/8-Inch Beam Clip
4	Body Forging
5	5/8-Inch Flat Washer
6	5/8-Inch Hex Locknut
7	5/8-Inch Lock Washer
8	5/8-Inch Hex Nut
9	Drop Rod
10	Hanger Truss Bracket
11	1/2-Inch Hex Bolt
12	1/2-Inch Flat Washer
13	1/2-Inch Hex Locknut
14	Angle Truss Clamp
15	Track

NOTE: Torque all hanger kit 5/8-inch diameter locknuts (6) to 108 foot-pounds.

NOTE: 700 Series Plain Track uses 3/4-inch hardware. Torque 3/4-inch hardware to 210 foot-pounds.

4. Sloped Drop Rod

Refer to Figure 12 for Steps A Through X

a) Ensure that track splices (B in *Ceiling-Mounted Monorail Assembly Drawing*), if supplied, have been installed per **ATTACHING THE TRACK SPLICE TO THE TRACK SECTIONS** on pages 3-5.

b) Using a measuring tape and a permanent marker, measure and mark 18 inches in from each end of the track (18) for standard overhang. Also measure and mark your support spacing requirements. These locations are where the hanger kits (A in *Ceiling-Mounted Monorail Assembly Drawing*) should be installed on the track (18).

NOTE: 18-inch overhang is standard. Refer to your Final Fabrication Drawing for correct overhang lengths and support spacing for your specific system.

c) Per **Figure 12,** insert two bolts (14) through two flat washers (16) and the bottom slots of the hanger truss bracket (13) so that the flat washers (16) are between the bolt heads and the bottom of the hanger truss bracket (13).

d) Per **Figure 12,** place the hanger truss bracket (13) on the marked spot on the end of the track (18) so that the bolts (14) hang down on both sides of the track (18). Ensure that the end of the hanger truss bracket (13) is 18 inches from the end of the track (18) for standard overhang.

e) Per **Figure 11, securely tighten** the angle truss clamps (15) to the bolts (14) using flat washers (16) and locknuts (17) so that the flat washers (16) are between the angle truss clamps (15) and locknuts (17). Ensure that the angle truss clamps (15) form *inverted-L's.*

f) Per **Figure 12,** screw a nut (11) onto the bottom of the threaded drop rod (4) and adjust so that about three inches of the drop rod (4) are showing from the bottom of the nut (11).

g) Per **Figure 12,** slide a lock washer (12) onto the threaded drop rod (4) so that the lock washer (12) is underneath the nut (11).

h) Per **Figure 12,** insert the bottom of the threaded drop rod (4) into the top hole of the hanger truss bracket (13) until the lock washer (12) is flush against the top of the hanger truss bracket (13) and the nut (11) is flush against the lock washer (12).

i) Per **Figure 12,** screw a locknut (9) to the bottom of the threaded drop rod (4) and adjust so that an inch of drop rod (4) is showing underneath the locknut (9).

j) Per **Figure 12,** insert the top of the drop rod (4) through the middle hole on the bottom of the beam clamp channel (2) so that three inches of drop rod (4) are showing.

k) Per **Figure 12,** slide bevel washers (10) and a spherical washer (8) onto the threaded drop rod (4) so that the spherical washer (8) is on top of the bevel washers (10).

NOTE: The degree of slope determines how many bevel washers (10) are required.

l) Per **Figure 12, hand tighten** a locknut (9) and a hex nut (11) onto the top of the drop rod (4) so that the locknut (9) is between the hex nut (11) and spherical washer (8).

m) Per **Figure 12,** insert bolts (5) through flat washers (7) and the bottom side holes in the beam clamp channel (2) so that the flat washers (7) are between the bolt heads (5) and the bottom of the beam clamp channel (2) and the bolt heads (5) are on the bottom of the beam clamp channel (2).

n) Per **Figure 12,** slide beam clamp clips (3) onto the bolts (5) and **hand tighten** locknuts (6) to the bolts (5).

NOTE: Ensure that the beam clamp clip wedges are facing away from the center of the beam clamp channel (2).

o) Repeat steps **c)** through **n)** to attach another hanger truss bracket (13) to the marked spot on the other end of the track (18).

p) Using a crane and lifting straps, lift the track (18) to the existing ceiling support structure (1).

q) Use a man lift or cherry picker to reach the track (18) and ceiling support structure (1).

r) Per **Figure 12,** position the track (18) and attached components (2 through 17) so that the beam clamp clips (3) are on each side of the ceiling support structure (1).

NOTE: Track splice joints (B in *Ceiling-Mounted Monorail Assembly Drawing*) must be within 48 inches from the center of a ceiling support structure (1).

s) Per **Figure 12,** place the beam clamp clips (3) so they are holding onto the bottom flange of the ceiling support structure (1). Adjust the beam clamp clips (3) as needed by tightening or loosening the locknuts (6) until the beam clamp clips (3) sit properly on the bottom flange of the ceiling support structure (1), in the cutouts of beam clamp channel (2), and are an equal number of cutouts away from the center of the beam clamp channel (2). Ensure that the bolts (5) are as close as possible to the edge of bottom flange of the ceiling support structure (1).

t) Per **Figure 12,** securely tighten the locknuts (6) so that the beam clamp clips (3) are tight to the bottom flange of the ceiling support structure (1).

u) Repeat steps **q)** through **t)** to attach the track (18) to the other end ceiling support structure (1).

v) Now that the track (18) is attached to end ceiling support structures (1), repeat steps **c)** through **n)** and **q)** through **t)** to attach the track (18) to the remaining ceiling support structures (1).

w) After the track (18) has been securely tightened to all ceiling support structures (1), ensure that all beam clamp clips (3) are installed horizontally and level within plus or minus five degrees. Then torque the top drop rod 5/8-inch diameter nuts (11) to 108 foot-pounds, beam clamp and bottom drop rod 5/8-inch diameter locknuts (6 and 9) to 108 foot-pounds, and all hanger kit 1/2-inch diameter locknuts (17) to 51 foot-pounds.

x) Go to page 22 for final installation instructions.

Figure 12

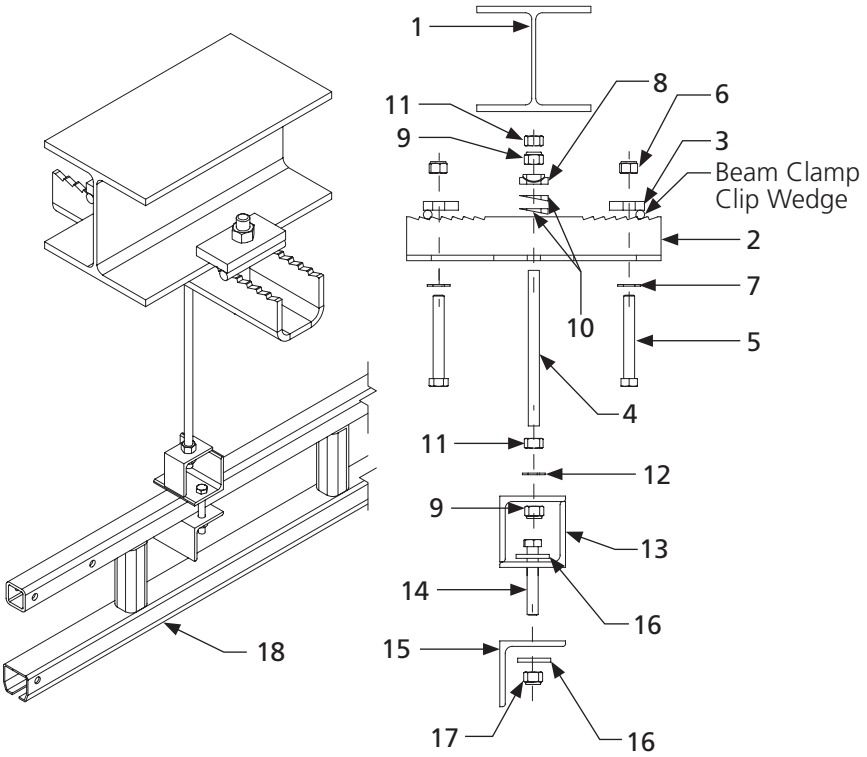

NOTE: Torque all beam clamp and bottom drop rod 5/8-inch diameter locknuts (6 and 9) to 108 foot-pounds.

NOTE: 700 Series Plain Track uses 3/4-inch hardware. Torque 3/4-inch hardware to 210 foot-pounds.

Item	Description
1	Ceiling Support Structure
2	Beam Clamp Channel
3	Beam Clamp Clip
4	5/8-Inch Drop Rod
5	5/8-Inch Hex Bolt
6	5/8-Inch Hex Locknut
7	5/8-Inch Flat Washer
8	Spherical Washer
9	5/8-Inch Hex Locknut
10	5/8-Inch Bevel Washer
11	5/8-Inch Hex Nut
12	5/8-Inch Lock Washer
13	Hanger Truss Bracket
14	1/2-Inch Hex Bolt
15	Angle Truss Clamp
16	1/2-Inch Flat Washer
17	1/2-Inch Hex Locknut
18	Track

FINAL ASSEMBLY

Refer to Ceiling-Mounted Monorail Assembly Drawing for Steps 1 Through 7

1. Ensure that the track (C in *Building Materials Description*) is secured properly to the ceiling support structure (1 in *Building Materials Description*).
2. Confirm that all of the system's nuts are torqued to the required specifications below prior to removing support rigging (your telescoping fork truck or crane) from any component.

Bolt Diameter	Hex Nut Torque	Minimum Hex Locknut Torque
1/2 Inch	78 Foot-Pounds	51 Foot-Pounds
5/8 Inch	154 Foot-Pounds	93 Foot-Pounds
3/4 Inch	257 Foot-Pounds	151 Foot-Pounds
7/8 Inch	341 Foot-Pounds	224 Foot-Pounds
1 Inch	514 Foot-Pounds	325 Foot-Pounds

NOTE: The hanger kit 5/8-inch nuts (A4 and AA6) should be torqued to 108 foot-pounds and hanger kit 1/2-inch nuts should be torqued to 51 foot-pounds.

3. Per **Detail "C,"** insert your Anchor Trolley™ (C1) into the track (C). For a multiple track system, install one Anchor Trolley per track.
4. Per **Detail "C,"** install the track's end stops by inserting the bolts (C3) through the holes at both ends of the track (C) and through the rubber sleeves (C5).

Detail "C" (Trolley[s] and End Stops to Track)

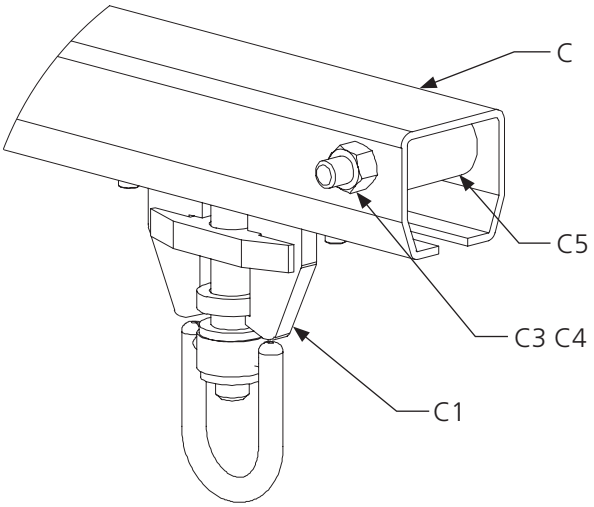

Item	Description
C	Track
C1	Swiveling Connector Anchor Trolley
C3	End Stop Bolt
C4	1/2-Inch Hex Locknut
C5	End Stop Rubber Sleeve

NOTE: The 1/2-inch hex locknuts (C4) should be torqued until securely tightened against the track. Be careful not to damage the track in any way.

5. Attach and torque the end stop nuts (C4) until securely tightened against the track.
6. For multiple track systems, repeat steps **1.** through **5.** to insert the remaining Anchor Trolleys (C1) into the remaining tracks (C).
7. **This system must be used with an ANSI-rated self-retracting lanyard (SRL).** Connect your SRL and retrieval tagline in accordance with the manufacturer's specifications and your training.
8. Go to page 23 for runway alignment tolerance instructions.

RUNWAY ALIGNMENT TOLERANCE

Rigid Lifelines recommends runway slope of no more than 1/4 inch per 20 feet of track to prevent drift of the trolley. See **Figure 13** for more information.

Figure 13

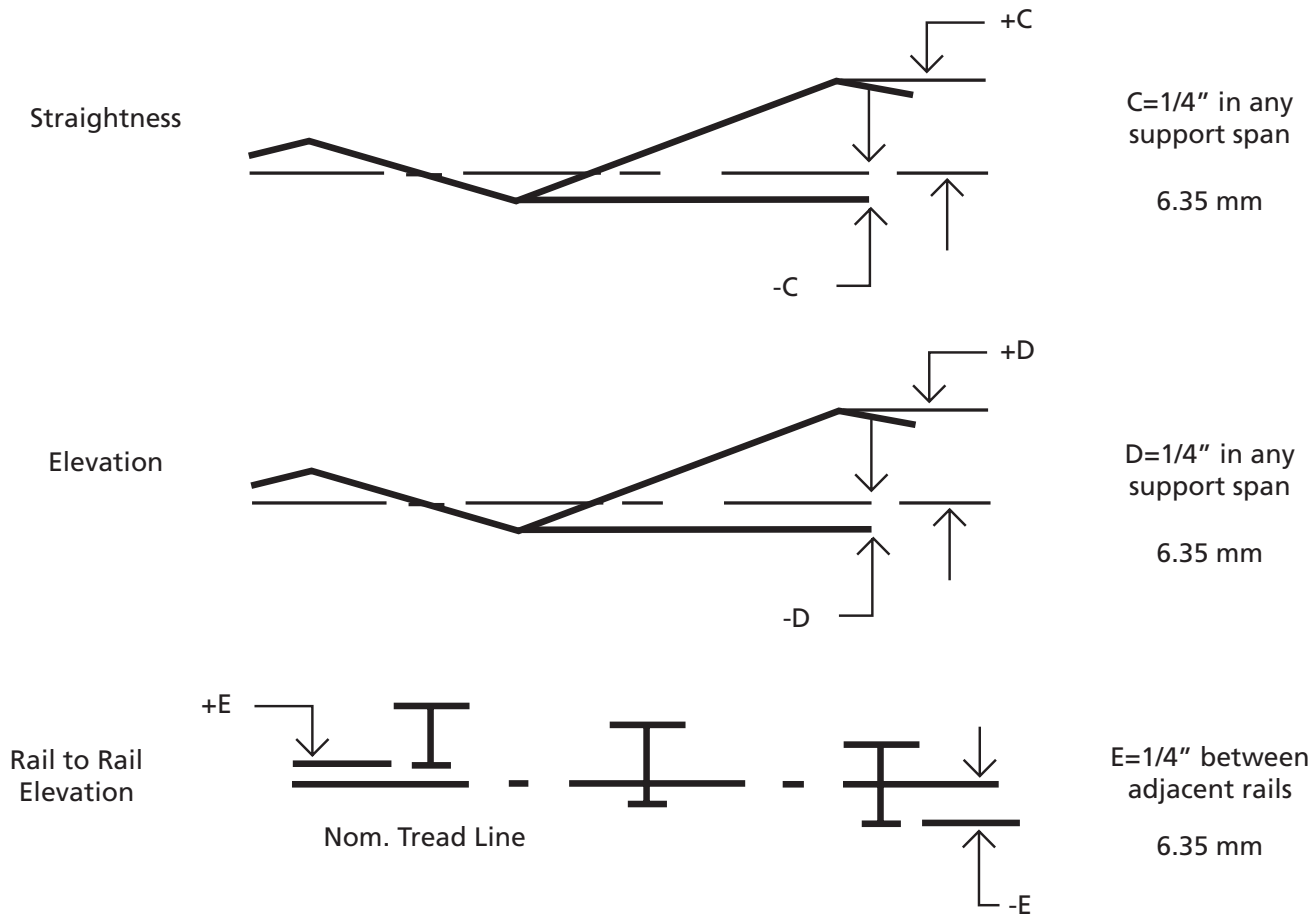

NOTE: Illustrations in **Figure 13** are provided courtesy of MMA MH27.1.

INTERMEDIATE BUMPER INSTALLATION (IF SUPPLIED)

NOTE: Follow the approval drawing, if provided, to prevent overloading of the track and system.

1. Using a man or scissor lift, remove an end stop from the end of the track if end stop is present.
2. Per **Figure 14**, slide the top plate (6) and attached components (2, 3, 4, and 5) into the track (1) and to the desired location in the track. Ensure that the rubber bumper (2) is facing the trolley.
3. Per **Figure 14**, insert two bolts (8) through two split lock washers (7).
4. Per **Figure 14**, align the holes in the bottom plate (9) with the holes in the top plate (6). Ensure that the bottom plate (9) is underneath the track (1).
5. Per **Figure 14**, securely tighten the bolts (8) and attached split lock washers (7) through the aligned holes in the bottom plate (9) and top plate (6) so that the bolt heads are underneath the bottom plate (9). Ensure that the split lock washers (7) are between the bolt head and the bottom of the bottom plate (9).
6. Using a torque wrench, torque 3/8-inch diameter bolts to 33 foot-pounds. Torque 1/2-inch diameter bolts to 78 foot-pounds. See the tables below.
7. Reinsert the end stop that was removed in step 1.

Figure 14

NOTE: Intermediate bumpers should not be used as end stops.

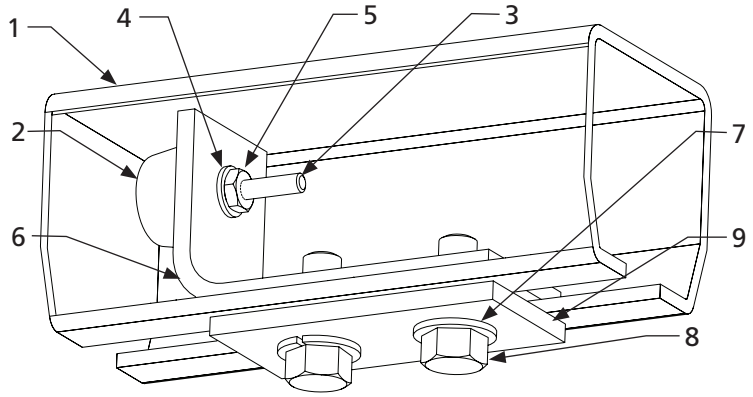

500 Series Track (P/N: 1500IB)

Item	Description
1	Track
2	Rubber Bumper
3	10-32 NC by 1-1/4-Inch Machine Screw
4	#10 Lock Washer
5	10-32 NC Nut
6	Top Plate
7	3/8-Inch Split Lock Washer
8	3/8-Inch by 1-Inch Hex Head Bolt
9	Bottom Plate

NOTE: For part number 1500IB, item 8 requires a 9/16-inch wrench or socket.

600, 700, and 900 Series Track (P/N: 1700IB)

Item	Description
1	Track
2	Rubber Bumper
3	10-32 NC by 1-1/4-Inch Machine Screw
4	#10 Lock Washer
5	10-32 NC Nut
6	Top Plate
7	1/2-Inch Split Lock Washer
8	1/2-Inch by 1-1/2-Inch Hex Head Bolt
9	Bottom Plate

NOTE: For part number 1700IB, item 8 requires a 3/4-inch wrench or socket.

MAINTENANCE

1. Visually inspect the system before each use and fully inspect the system after a fall event and annually. Refer to the INSPECTION CHECKLISTS in the next section of this manual for checklists for *Ceiling-Mounted Monorail Anchor Track™ System* and *Annual Anchor Track™ System*.
2. **If the system fails ANY inspection point on any of the inspection checklists, immediately remove the system from service and call Rigid Lifelines® at 800-869-2080 for instructions.**
3. During the first month after a new installation, a weekly inspection of the system should be performed using the *After a Fall Event and Annual Anchor Track™ System Inspection Checklist.* It is important to note that every system application and use will be different, meaning some conditions of use will require more frequent inspection. Examples of such conditions include two or three shift operations or working with or near corrosive chemicals or elements.
4. Refer to the Anchor Trolley™ User Instruction Manual (Manual 103-0054), which comes packaged with the Anchor Trolley, for its trolley inspection checklists.
5. Download and print additional blank inspection checklists from the literature tab at RigidLifelines.com.

LABELING

The letters correspond to the letters on the Ceiling-Mounted Monorail Label Placement Drawing. All labeling must be legible and attached to the system. For replacement labels, contact Rigid Lifelines®.

RIGID LIFELINES LABEL PLACEMENT DISCLAIMER

If system is shipped unpainted or without properly secured labels, proper label placement is the sole responsibility of the end user. Follow the Label Placement Drawing shipped with this user manual to place labels correctly. Rigid Lifelines cannot be held liable for any damage or injury resulting from omitted or improper label placement.

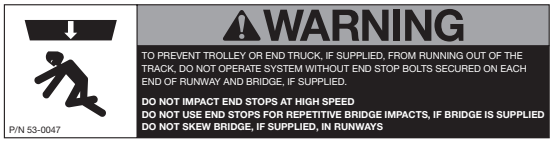

P/N 53-0047

RIGID LIFELINES® | PEOPLE & EQUIPMENT PER TRACK. 1350 LB. MAAF EA. PERSON | (800) 869-2080 RigidLifelines.com

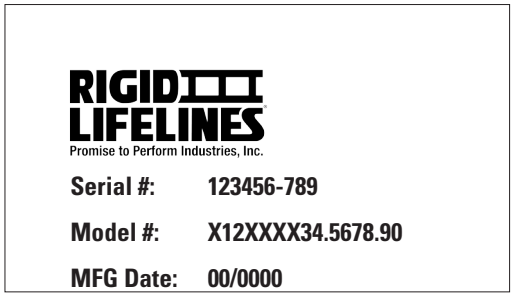

Notes on Label Placement Drawing

- Label **53-0047** should be placed on both ends of the lower section of trussed track on both sides of each track section.
- Label **53-0359** should be centered on the lower section of trussed track on both sides of each track section and is **P/N 53-0535** for one person systems, **53-0536** for two person systems, and **53-0359** for **three** to **eight** person systems, along with **53-0413** through **53-0418** respectively. Labels **P/N 53-0413** through **53-0418** are the capacity numbers three through eight for the Anchor Track Label and should be placed to the right of the line following "Rigid Lifelines."
- Rigid Lifelines label should be placed on the lower section of every other trussed track on both sides.

CEILING-MOUNTED MONORAIL ANCHOR TRACK™ SYSTEM INSPECTION CHECKLIST

Before Each Use

Inspector Name: _____

Date: _____

System Number: _____

Model: _____

	Inspection Result (✔)	
INSPECTION POINTS	**PASS**	**FAIL**
1. Test the swiveling connector(s) on each trolley to verify that each trolley rotates and swivels freely.		
2. Verify that the trolley(s) can easily and smoothly roll the full length of the runway track(s).		
3. Check all system welds for cracks.		
4. Check system components for corrosion.		
5. Check system components for bent or damaged areas.		
6. Check support structure for stability.		
7. Visually check all bolted assemblies for proper connections and properly secured bolts and nuts.		
8. Verify that the system is employed in a manner that will not result in off-plumb loadings past runways and bridge end stops.		

©2025. All Rights Reserved. All specifications and product designs subject to change without prior notice.

AFTER A FALL EVENT AND ANNUAL ANCHOR TRACK™ SYSTEM INSPECTION CHECKLIST

RIGID LIFELINES®
Promise to Perform Industries, Inc.

Inspector Name: _____

Date: _____

System Number: _____

Model: _____

	Inspection Result (✔)	
INSPECTION POINTS	**PASS**	**FAIL**
1. Check that the beam clamps are installed horizontally within + / - five degrees.		
2. Check that end stop bolts are present and have locknuts installed.		
3. Using a torque wrench, check that all bolts are present and torqued to values shown on Assembly Drawing.		
4. Check that splices, if supplied, are centered on track joints.		
5. Verify that capacity labels are present, attached, and legible. See Label Placement Drawing.		
6. Verify that the number of trolleys matches the value on the capacity label.		
7. Verify that the fall arrest system is not being used for material handling.		
8. Check the track for levelness within + / - 1/4 inches per 20 feet of track.		
9. Check the track flanges. Track flanges cannot be bent downward more than five degrees.		
10. Check the track thickness. Track thickness cannot be worn more than 10 percent.		
11. Check all system welds for cracks.		
12. Check system components for corrosion and bent or damaged areas.		
13. Check that all wheel studs, if supplied, are torqued to value shown on Assembly Drawing. Note that these 1/2-inch wheel studs have a different torque value than the system's other 1/2-inch bolts.		
14. Verify trolley can traverse entire length of track without snags.		
15. Inspect the trolley following the *After a Fall Event and Annual Inspection Checklist* in the Rigid Lifelines Anchor Trolley™ User Instruction Manual (103-0054).		
16. Test the operation of the trolley's swiveling connector and verify that it can rotate freely.		
17. Test the operation of the trolley and verify that the wheels rotate freely.		
18. Check system components for loose components.		
19. Check system components for loose or missing fasteners.		
20. Check system support structure for stability.		
21. Verify that hanger assemblies are installed properly and fasteners are torqued to proper values.		
22. Check that the support arms pivot bolts, if supplied, are properly installed and tightened.		
23. Check system for unauthorized modifications. Only Rigid Lifelines can authorize modifications. Remove system from service if it is modified in any way.		

©2025. All Rights Reserved. All specifications and product designs subject to change without prior notice.

PRODUCT WARRANTY COVERAGE

Rigid Lifelines warrants its products to be free from defects in material and workmanship as follows:

- Engineered Track Equipment, Wearable End Truck Wheels, and Anchor Trolley™ Wheels and Teeth: Ten Years
- Motorized Products and Drive Components and Paint and Finishes for Non-Aluminum Components: Two Years
- Soft Goods, Devices, Connectors, and Accessories: One Year

Ten-Year Warranty Coverage:

- Defects in equipment material and workmanship of manual track systems and equipment
- Only applies to the wearable wheels on end trucks and wearable Anchor Trolley wheels and teeth

Rigid Lifelines warrants its manual Anchor Track™ systems and equipment to be free from defects in material and workmanship for a period of ten (10) years or 20,000 hours, commencing on the date of shipment to the first retail purchaser. This warranty extends only to parts that are not subject to normal wear and tear from use (nonwearable), with the exception that it does apply to the wearable wheels supplied on end trucks and wearable Anchor Trolley wheels and teeth.

Two-Year Warranty Coverage:

- Defects in equipment material and workmanship of motorized systems and equipment
- Paint coatings and finishes for non-aluminum components

Rigid Lifelines warrants motorized equipment to be free from defects in material and workmanship for a period of two (2) years or 4,000 hours, commencing on the date of shipment to the first retail purchaser. Rigid Lifelines warrants its paint and finishes for a period of two (2) years. Warranty claims related to coatings must be accompanied by documentation of the product's application and environmental conditions from time of delivery to time of claim.

One-Year Warranty Coverage:

- Defects in soft goods, devices, connectors, and accessories

Rigid Lifelines warrants fall protection soft goods, devices, connectors, and accessories to be free from defects in material and workmanship for a period of one (1) year, commencing on the date of shipment to the first retail purchaser.

WARRANTY TERMS & CONDITIONS

All warranty claims must be approved by Rigid Lifelines before any work is performed. Rigid Lifelines's obligation under this warranty is limited to the replacement or repair of Rigid Lifelines products at the factory or separate location approved by Rigid Lifelines. **Other than the above mentioned warranty, Rigid Lifelines will not honor any other warranties—whether expressed, implied, or statutory—and disclaims any warranties of merchantability or fitness for a particular purpose.** Rigid Lifelines has the right to reject any warranty claim due to harsh and/or inappropriate environmental conditions.

Rigid Lifelines Is Not Liable for:

- Indirect, incidental, or consequential damages including lost profits, operating costs, loss of production, or travel expenses
- Components or accessories not manufactured by Rigid Lifelines (with the exception of soft goods components and accessories sold and warranted by Rigid Lifelines. For such components and accessories, the warranty shall be determined by the terms and conditions of any warranty provided by the manufacturer of such components and accessories.)
- Defective equipment or system failure caused by misuse, negligence, and improper installation or maintenance
- Equipment that has been used in excess of its rated capacity or beyond its service factors
- Rework and modification of any equipment that has been altered without Rigid Lifelines's written authorization
- Freight charges and damage incurred by freight carriers
- Any loss, injury, or damage to persons or property resulting from failure or defective operation of material or equipment
- This warranty is void for any product that is designed to deform or absorb energy during a fall event and needs to be replaced after a fall event has occurred

Reimbursement Disclaimer:

- Written notice of any claimed system defect must be given to Rigid Lifelines within ninety (90) days of shipment.
- All requests for reimbursement must be accompanied by proper documentation.
- Reimbursement is provided in the form of a credit unless otherwise approved by Rigid Lifelines management.
- Reimbursement for labor will be provided at a maximum rate of $90 per hour.
- All reimbursement is subject to approval by Rigid Lifelines management.

ABOUT RIGID LIFELINES®

OUR MISSION:

Rigid Lifelines is driven by passion for providing our customers with quality, user-friendly solutions to keep workers safer and more productive at elevation.

OUR COMMITMENT

Rigid Lifelines professionals are dedicated to designing and manufacturing a variety of fall protection systems that meet or exceed OSHA requirements and ANSI Z359 code. Our team of engineers and safety professionals combine over 30 years of experience in the fall protection industry to manufacture fall protection systems that utilize the most advanced technology and designs.

Rigid Lifelines production facilities are certified under the ISO 9001:2015 Quality Management System to provide superior quality products. And every welder at Rigid Lifelines is certified to handle steel (D1.1) and aluminum (D1.2) in accordance with the rigorous requirements and lab testing established by the American Welders Society (AWS).

Rigid Lifelines engineers are involved with ANSI Z359 Technical Review Committee and the ANSI Z359.19 Rigid Horizontal Rail Standard. We also participate with the Safety & Health Technology Committee of the Association of Iron & Steel Technology. Our involvement allows us to keep a constant pulse on the trends in both industry practice and government regulation.

OUR PRODUCTION:

All of our systems are designed and manufactured in the United States of America. We have production facilities in Las Vegas, Nevada, and at our headquarters in Morgantown, Pennsylvania.

RIGID LIFELINES®
Promise to Perform Industries, Inc.

Morgantown, PA | Las Vegas, NV
Toll Free: (800) 869-2080 | Local: (610) 286-7200 | Outside US: 1-610-286-7200 | Fax: (610) 286-0085
RigidLifelines.com | info@RigidLifelines.com

©2025. All rights reserved. Specifications subject to change without prior notice. RLL-UIMCMM1020V1